Harrier GT

Installation, Assembly and Servicing

Oil, Gas or Dual Fuel Fired Boilers

Assembly and Installation Instructions for Ideal Harrier Oil, Gas or Dual Fuel Fired heating boilers should be read in conjunction with the general technical data tables enclosed and any other technical publication supplied with the burner.

CAUTION. To avoid the possibility of injury during the installation, servicing or cleaning of this appliance care should be taken when handling edges of sheet steel components.

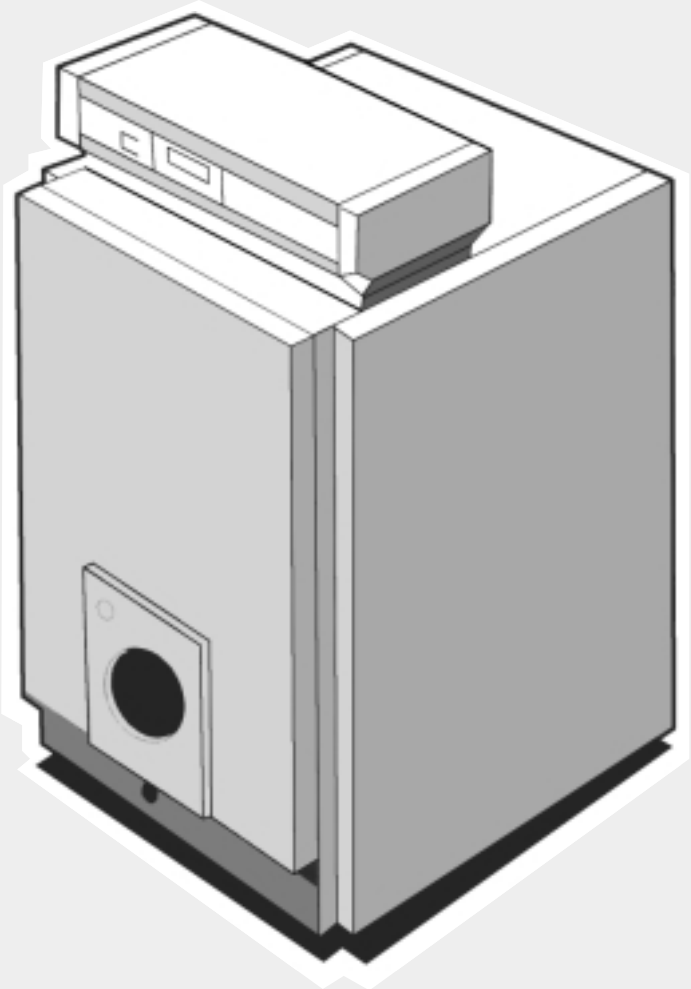

Ideal BOILERS

spares & parts online
IBASIS.co.uk©

CONTENTS

Assembly 5

Chimney Connection 7
5.1 Flue sizing 7
5.2 Dimensional information required 7
5.3 Connection 7

Electrical Connection to the Control Panel 8
7.1 Deluxe (option) - control panel 9
7.2 Standard control panel 12

General 3
1.1 The boilers covered by this document 3
1.2 Packing 3

Hydraulic Connection 5
4.1 Dimensional information required 5
4.2 Installation recommendations 6
4.3 Filling the installation 6
4.4 Desludging 6

Installation of the Boiler 4
2.1 Installation 4
2.2 Levelling 5

Maintenance 16
9.1 Boiler 16
9.2 Precautions to be observed in case of long stop of the boiler 18

Oil or Gas Connection 8

Start Up 12
8.1 Deluxe (option) - control panel 12
8.2 Standard control panel 15

INTRODUCTION

The Harrier GT boilers are a range of steel shell pressure jet boilers offering high efficiency operation, ease of maintenance, fuel flexibility and low emissions. Suitable for oil or gas operation the Harrier GT range is supplied in a choice of 5 standard models, rated in outputs from 105 kW (358,000 Btu/h) to 330 kW (1,126,000 Btu/h). The range has a maximum operating pressure of 5 bar.

Designed with a large combustion chamber that is positioned in the lower part of the heat exchanger, the Harrier GT range ensures maximum heat transfer efficiency (up to 91% net).

Through the use of an increased number of flue way tubes which are positioned in the hottest area of the heat exchanger and constructed from a thicker steel construction than that of of traditional boilers, the Harrier GT Range is capable of impressive output to size ratio.

DUTY

The range of boiler is suitable for: combined indirect pumped domestic hot water and central heating systems; independent indirect pumped domestic hot water or central heating systems.

Fully pumped systems may be open vented or sealed.

The range of boiler is NOT suitable for:

1. Gravity DHW systems.
2. Gravity heating systems.
3. Direct domestic hot water supply.

FOUNDATION

The boiler must stand on a non-combustible floor (i.e. concrete or brick) which must be flat, level and of a suitable load bearing capacity to support the weight of the boiler (when filled with water) and any ancillary equipment.

GAS SAFETY (INSTALLATION AND USE) REGULATIONS, 1994

It is law that **all** gas appliances are installed and serviced by a CORGI registered installer in accordance with the above regulations.

Failure to install appliances correctly could lead to prosecution. It is in your own interest, and that of safety, to ensure the law is complied with.

The installation of the boiler MUST also be in accordance with the latest I.E.E Wiring Regulations, local building regulations, bye-laws of the local water authority, the building regulations and the Building Standards (Scotland) and any relevant requirements of the local authority.

Detailed recommendations are contained in the following British Standard Codes of Practice:

BS. 6891	Low pressure installation pipes.
BS. 5449	Forced circulation hot water systems.
BS. 5546	Installation of gas hot water supplies for domestic purposes (2nd Family Gases).
BS. 6644	Ventilation (for gas appliances of rated input exceeding 60 kW).

1.1 THE BOILERS COVERED BY THIS DOCUMENT

The **Harrier GT** range of boilers is an automatic range of pressurised hot water boilers, connected to a chimney, to be fitted with an independent burner using domestic fuel oil or gas, with a working power rating from 70 to 330 kW.

Boiler models:

HARRIER GT: boiler with standard control panel.

HARRIER GT: boiler with DELUXE control panel: option can be fitted (a) SV-matic weather compensatc or (b) SVR module for domestic hot water priority.

1.2 PACKING

Harrier GT in bulk

ITEM		Box No.	Harrier GT 5	Harrier GT 6	Harrier GT 7	Harrier GT 8	Harrier GT 9
Front section		8219 - 0002	1	1	1	1	1
Intermediate section		8219 - 0001	3	4	5	6	7
Rear section		8219 - 8960	1	1	1	1	1
Tie rod pack		4 sect.					
		5 sect.	1				
		6 sect.		1			
		7 sect.			1		
		8 sect.				1	
		9 sect.					1
Body accessories		ID 8	1				
		ID 9		1			
		ID 10			1		
		ID 11				1	
		ID 12					1
Burner door		ID 13	1	1	1	1	1
Baffles		ID 17	1				
		ID 18		1			
		ID 19			1		
		ID 20				1	
		ID 21					1
Casing		ID 2	1				
		ID 3		1			
		ID 4			1		
		ID 5				1	
		ID 6					1
Control panel	- E	ID 22					
	- Standard	ID 24	1	1	1	1	1
For the optional equipment, see the current price list							

HEALTH & SAFETY DOCUMENT NO 635

The Electricity at Work Regulations, 1989.

The manufacturer's notes must NOT be taken, in any way, as overriding statutory obligations.

IMPORTANT. These appliances are CE certificated for safety and performance. It is, therefore, important that no external control devices, e.g. flue dampers, economisers etc., are directly connected to these appliances unless covered by these Installation and Servicing Instructions or as otherwise recommended by **Caradon Ideal Limited** in writing.
If in doubt please inquire.

Any direct connection of a control device not approved by **Caradon Ideal Ltd.** could invalidate the certification and the normal appliance warranty. It could also infringe the Gas Safety Regulations and the above regulations.

Notes.

To obtain the gas consumption:-

a. For l/s divide the gross heat input (kW) by C.V. of the gas (MJ/m^3).

b. For ft^3/h divide the gross heat input (Btu/h) by C.V. of the gas (Btu/ft^3).

2.1 INSTALLATION

The minimum dimensions indicated on the following drawing must be respected to ensure good access around the boiler.

VENTILATION GENERAL
Detailed recommendations for air supply are quoted in BS. 6644. The ventilation requirements in this gas fired boiler standard are also valid for oil fired boilers of the same heat input.

Remark: We draw your attention to the risks of corrosion of boilers which are installed in or near rooms in which the atmosphere can be polluted by chloride or fluoride substances E.g.: industrial buildings (solvents), refrigerating machines, etc...
In these cases, we cannot provide a warranty.

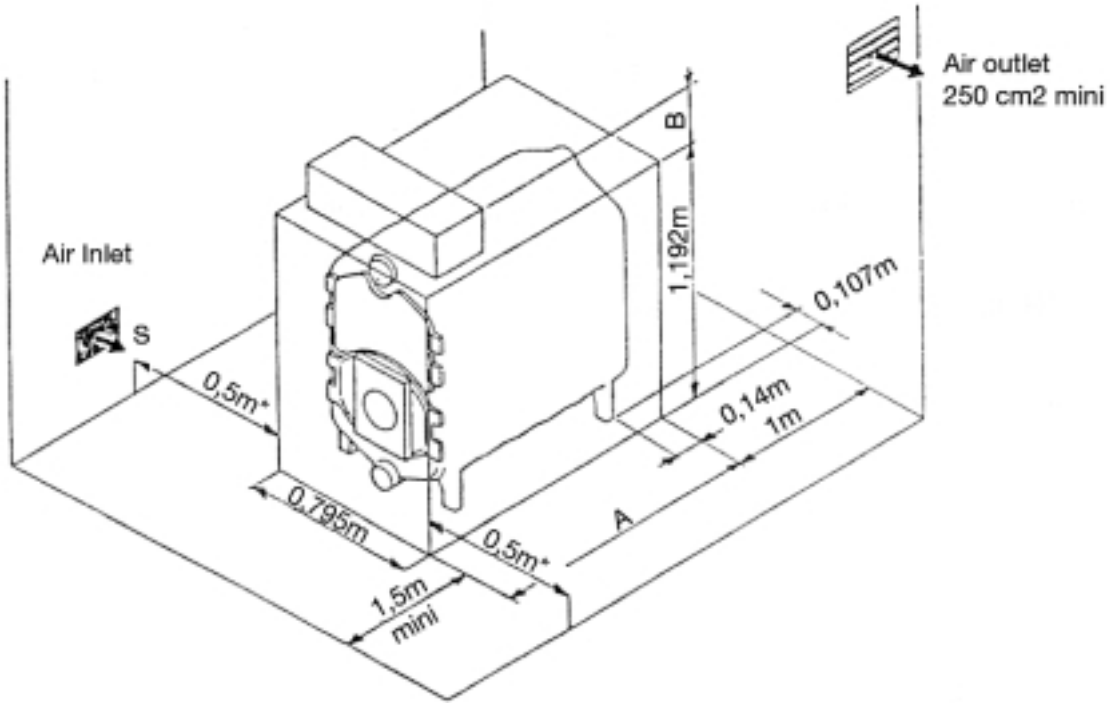

Boiler Type		Harrier GT 5	Harrier GT 6	Harrier GT 7	Harrier GT 8	Harrier GT 9
Dimension A		968	1128	1288	1440	1608
Dimension B	Standard control panel	105				
	Diematic and E control panel	195				
Section S	cm^2	500	650	800	990	1210

* Caution: Pay particular care to the space required for the boiler when the door is open.
For an installationof several boilers side by side, these dimensions need to be modified.

8219-EN-16

2.2 LEVELLING

Insert the cylinder into the hole provided in each foot of the heating body and screw the adjustable foot into it. Level.

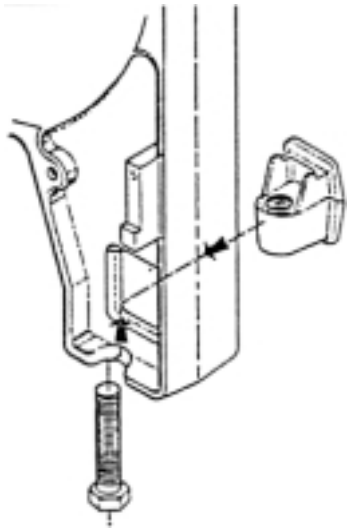

8219-EN-20

3 ASSEMBLY

For the assembly of the boiler, refer to the relevant paragraph of the instruction book.

4 HYDRAULIC CONNECTION

4.1 DIMENSIONAL INFORMATION REQUIRED

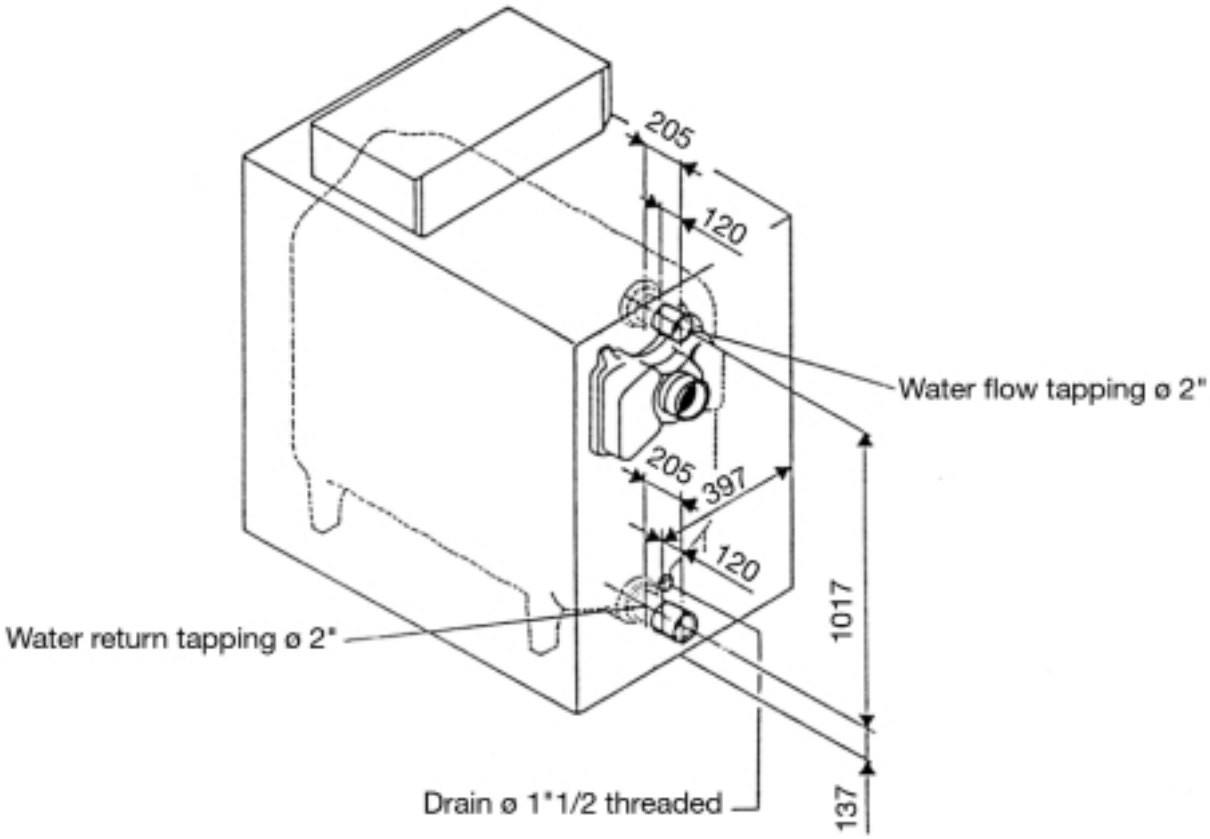

8219-EN-17

4.2 INSTALLATION RECOMMENDATIONS

The installation of the boiler MUST be in accordance with the following British Standards and Codes of Practice:

BS. 799 Pts. 4, 5, 6 & 7	Oil Burning Equipment
BS. 5410 Pts. 2 & 3	Installations for Space Heating and Hot Water Supply
BS. 5449 Pt. 1	Hot Water Systems
BS. 5854	Flues and Flue Structures in Buildings
BS. 5885 Pt. 1	Gas Burners ~ with outputs of 60kW upwards
BS. 6644	Installation of Gas Fired Boilers
BS. 6880	Low Temperature Hot Water Heating Systems
BS. 6891	Low Pressure Gas Pipework
British Gas Publication No. IM. 11	Industrial Gas Fired Boilers and Air Heaters

The following must be conformed with:
Current Building Regulations and Clean Air Act
Water Authority Regulations
Local Authority Regulations and Regional bylaws
Gas Safety Regulations

Any Special regional requirements of local Electricity and Gas undertaking.
Fire Service and Insurance Company requirements.
All electrical wiring MUST comply with the current I.E.E. regulations for the electrical equipment of buildings. In the interests of safety, a competent installer should be employed to effect the installation of the appliance.
Manufacturer's notes must NOT, in any way, be taken as over riding statutory obligations.

General
Recomendations relating to the water system are contained in BS. 5449 Pt. 1, BS. 5401 Pt.2. and E3S. 6880.

4.3 FILLING THE INSTALLATION

The boiler may be filled by the drain tap. Filling should be. done at a slow flow rate in order to purge all the air contained in the boiler by the upper point of the installation. Filling is always done with circulating pumps stopped.

MOST IMPORTANT: start up after partial or total drain of the installation.

If all air does not purge naturally via an opened expansion system, then in addition to automatic airvents able to ensure continuous automatic elimination of air from the system while it is running, the installation must also include manual airvents so that all upper points of the installation can be vented and so that when the installation is full of water it can be verified that all air is eliminated before the boiler are fired.

4.4 DESLUDGING

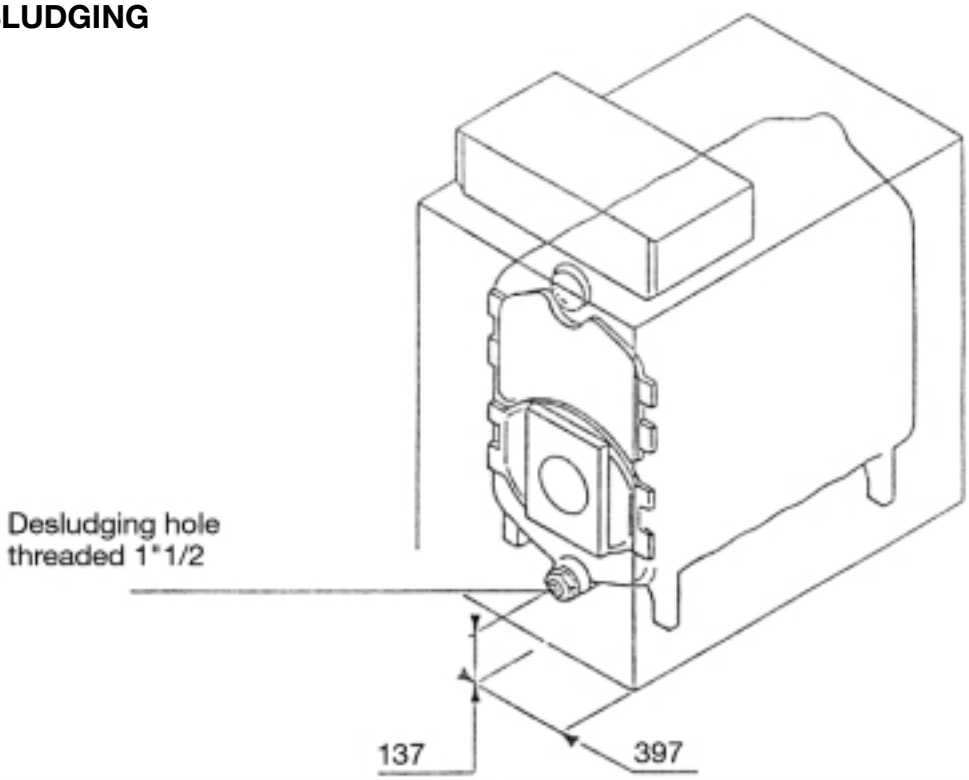

A desludging hole of ø 1"1 /2 supplied with a plug is provided in the lower part of the boiler to enable sludge to be drained out. The installer can fit 1/4 turn valve. Draining sludge involves the loss of significant quantities of water from the system, which must be refilled after the procedure.

Comment: Any replacement of boilers in an old system must include a careful washing out of the full installation. Fit a sludge trap on the return and close to the boiler.

8219-EN-19

5 CHIMNEY CONNECTION

As the Harrier GT is a high performance boiler, the temperature of the flue gases may be less than 160°C. The installer ought to take all precautions (padding out, casing, T for draining condensation) in order to avoid deterioration of the chimney.

If necessary, the baffles of the 4 upper smoke chambers may be partially removed with a resulting increase in temperature of the flue gases.

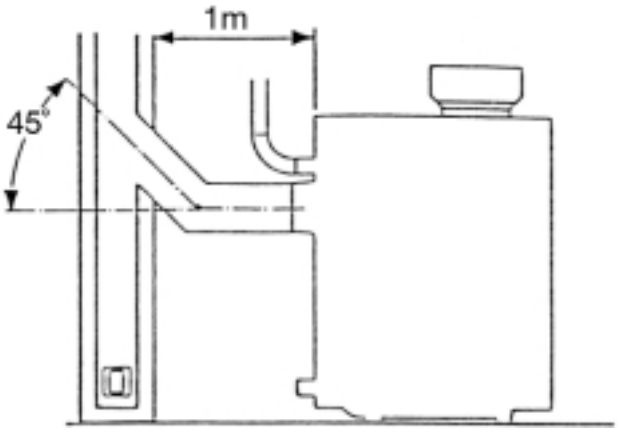

8219-EN-21

5.1 FLUE SIZING

To size the height and cross section of the chimney, refer to the regulations currently in force. Harrier GT boilers are boilers with pressurised combustion chambers and the pressure of the outlet must not exceed 0 mbar unless special precautions are taken to seal carefully between the outlet and flue.

The installer should provide a measuring point (ø 10 mm hole) on the flue for burner adjustment and control of the combustion. Detailed recommendations, relating to the design of flues for GAS fired appliances are quoted in BS. 6644 and British Gas Publication No. IM 11., whilst BS. 5410 Pt. 3 similarly applies OIL fired burners.

5.2 DIMENSIONAL INFORMATION NEEDED FOR CONNECTION

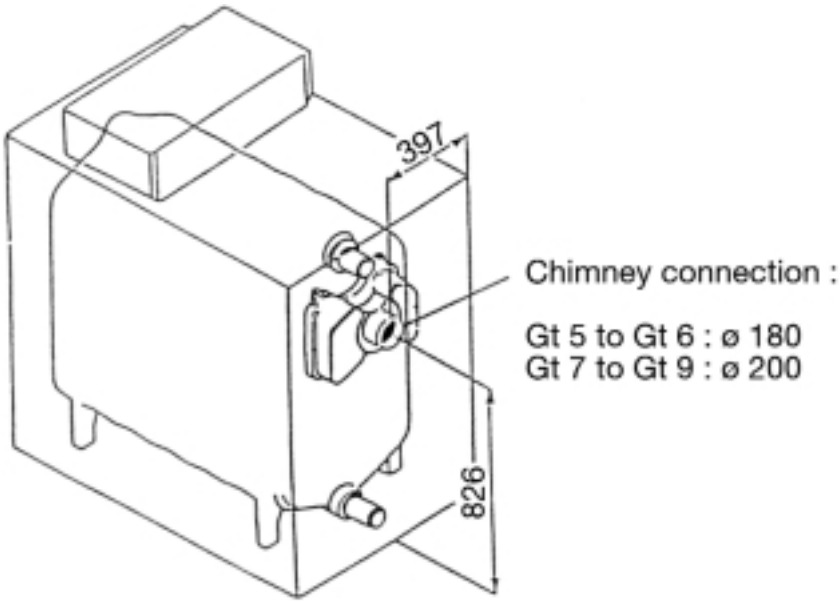

8219-EN-18

5.3 CONNECTION

Connection should be made according to regulation and practice by using a sealed pipe in a material able to withstand hot combustion gases and possible acidic condensation. The connection should be removeable and present minimal loss of load, it means it should be as short as possible and without sudden change of cross section.

Its diameter should always be at least equal to that of the boiler outlet, 180 mm for the 4, 5 and 6 section boilers and 200 mm the 7, 8 and 9 section boilers.

6 OIL OR GAS CONNECTION

See specific technical information supplied with the burner.

Burner positioning
Caution: the baffle at the head of the burner must be in line with the burner door insulation level.

GAS SUPPLY
The gas supply MUST be sized in accordance with British Gas recommendations and be fabricated in compliance with CP.331 Pt. 3 and any Local Gas Board installation standards. The Local Gas Board should be contacted, at a stage prior to actual insallation, for any advice or information required. Details and advice, relating to the use of L.PG. for firing the IDEAL HARRIER GT range of heating boilers, are available on request to Caradon Ideal Ltd.
OIL STORAGE TANK
The oil storage tank, oil supply pipe and connections to the burner unit MUST comply with the requirements of BS. 779 and CP.541 0.
The installation should conform to the recognised standards of good practice in the trade and comply with the relevant Codes of Practice, Building Regulations and Local Authority, Fire and insurance requirements.

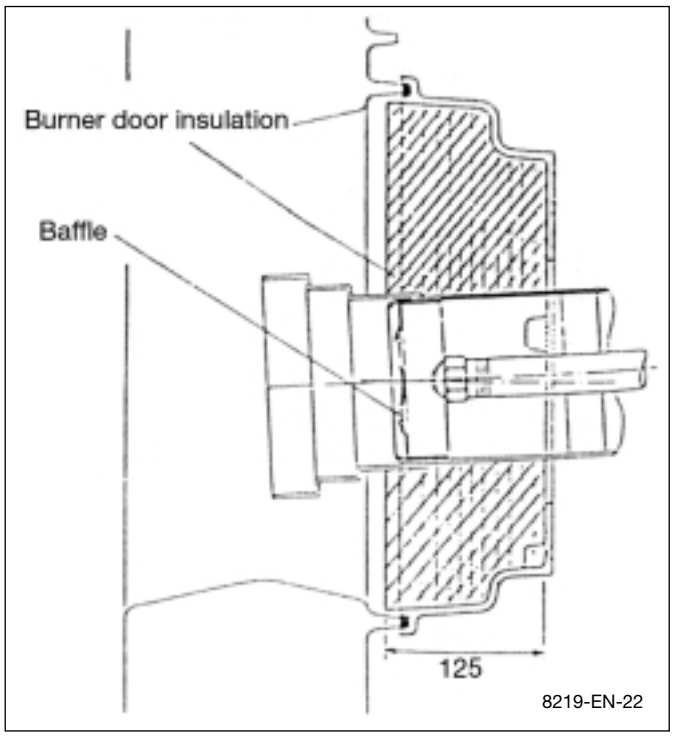

Drilling ø for burner door:

	Harrier GT 5 to 9 sections
ø A	135
ø B	170

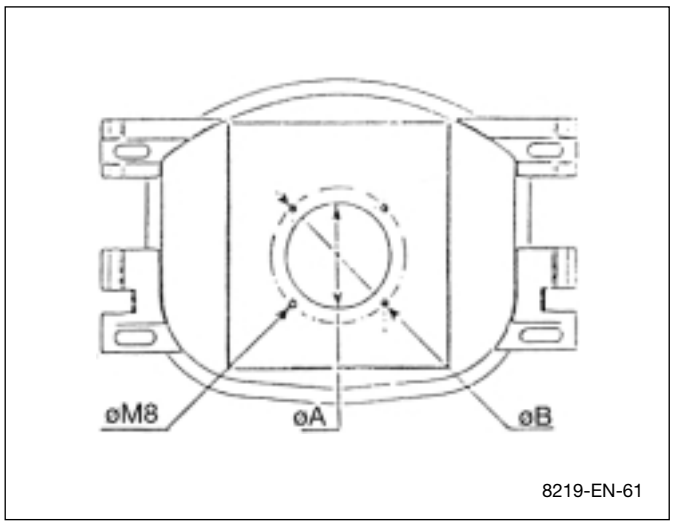

7 ELECTRICAL CONNECTIONS TO THE CONTROL PANEL

CAUTION: The connection must be carried out by a qualified professional.

As the electrical wiring has been carefully checked in the factory, the internal connections of the control panel must not be modified under any circumstances.

The electrical connections of the boiler must conform with the IEE wiring regulations in force and with the specifications shown on the electrical drawings provided with the equipment, and the directions given below. The equipment should be supplied by a circuit using an omnipolar circuit breaker with an opening gap greater than 3 mm.

7.1 DELUXE (OPTION) - CONTROL PANEL

All the connections are made to the 2 terminal blocks provided for this purpose in the control panel.

The connection cables are routed towards the front via the 2 cut outs in the panel behind the boiler, and run in the wiring duct towards the panel via the two rectangular cut outs of the front top panel. The sensor cables run on one side, the cables carrying the 230 V supply on the other and are supported on both sides by plastic clips.

Caution: the sensor wiring must be kept separate from the other circuits. Inside the boiler use the 2 cable runs. Outside the boiler, 2 wiring ducts at least 10 cm apart should be used.

Wiring is secured in the control panel using cable clips (6 cable clips are supplied in a separate packet) ; these are to be fitted into the control panel base - see diagram below.

Caution: the maximum current which may be switched by the outlet is 2 A, cos φ = 0,7 (= 450 W at the motor of 0.5 méch., hp signal current less than 16 A), if the charge exceeds one of these values, the control must be relayed by means of a contractor. The outlet group is protected by a 5 A fuse.

To open the control panel

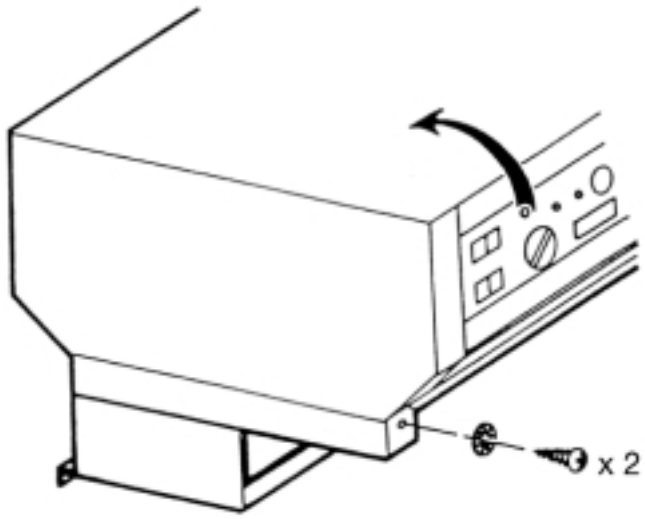

8219-EN-23

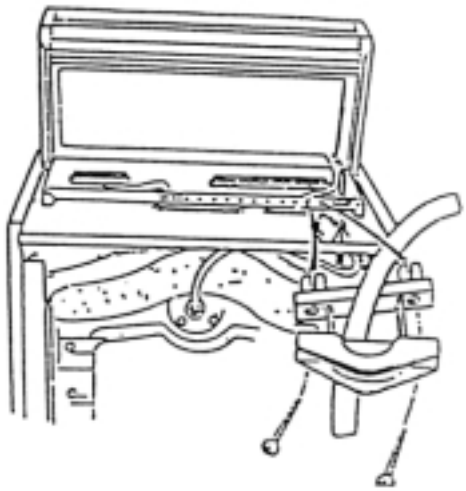

8219-EN-23

- **Burner connection**

Connection of the burner is made using European 7 and 4 pin plugs supplied with the boiler, which simply need to be fitted into the female plugs supplied with the burners.

7.1 DELUXE (OPTION) - CONTROL PANEL (continued)

- **Fitting the SVR option**

1

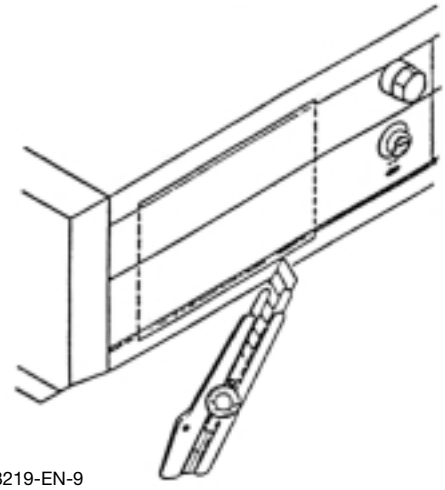

8219-EN-9

2

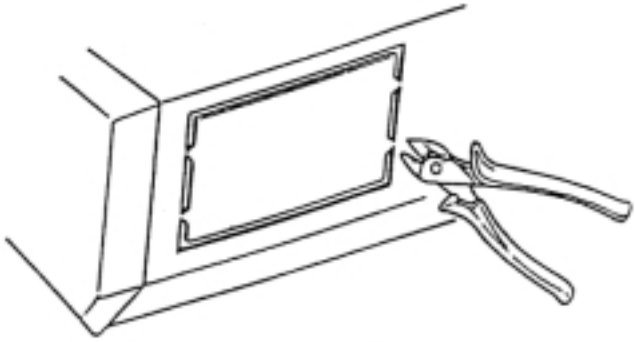

8219-EN-11

3

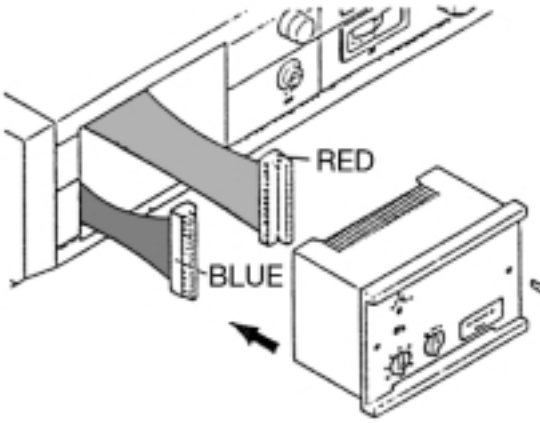

8219-EN-13

4

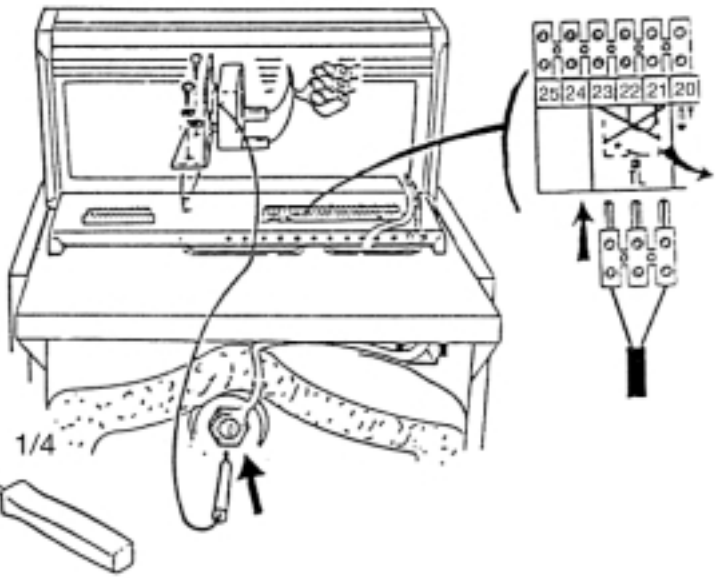

8219-EN-24

The SVR option box is to be fitted in the front part of the control panel. To do this:

- Remove the blank by cutting the surface with a stanley knife following the black line (1) and by breaking the perfo rations in the steel plate behind with a pair of snips (2).
- Connect the two connections, situated behind the blank (3), to the back of the SVR unit: blue connector to the blue plug, red connector to the red plug.
- Locate the unit by its front (3) and fix it using the two screws sited in the front part of the equipment (1/4 turn clockwise).

The limit thermostat supplied with the SVR option is to be fitted in the control panel in the place provided for this purpose, using the two self tapping screws supplied (4). The 3 pin thermostat male terminal is to be connected in the position provided on the 25 pin terminal block after having taken out the bridge ; the thermostat bulb is to be located in the small pocket in the body of the boiler.

7.1 DELUXE (OPTION) - CONTROL PANEL (continued)

- **Fitting an SV-matic weather compensator**

1

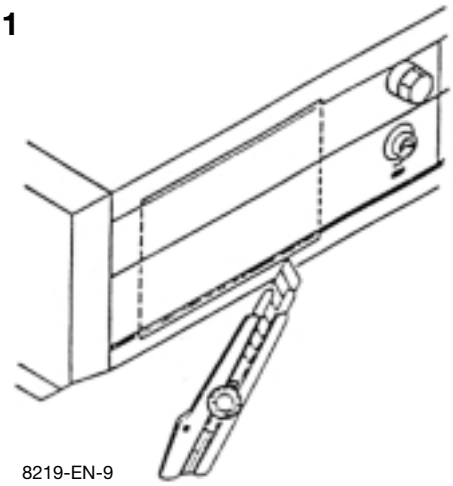

8219-EN-9

2

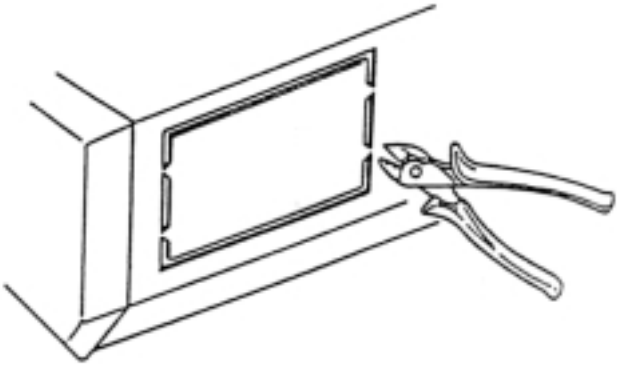

8219-EN-11

3

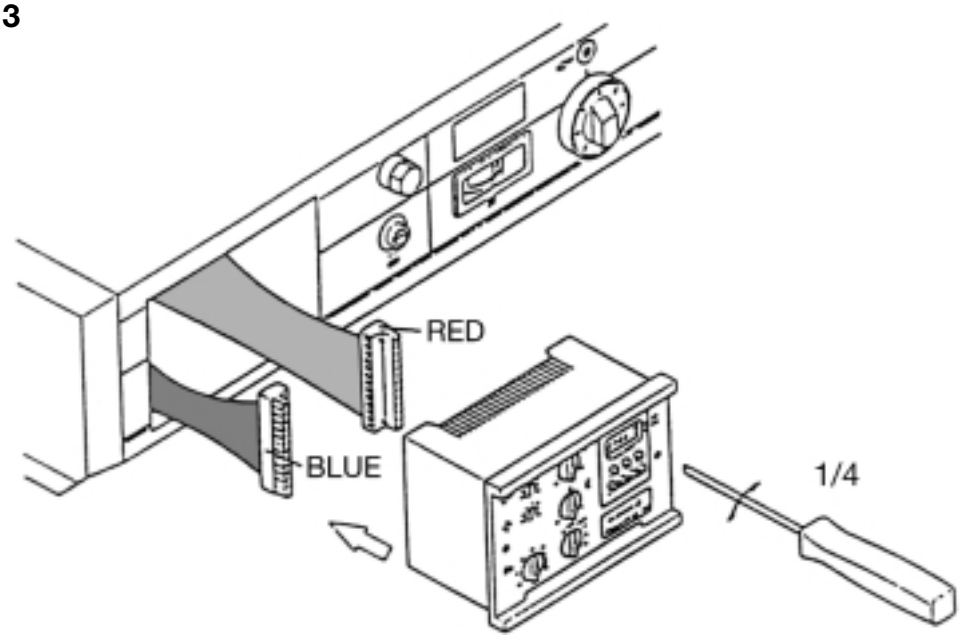

8219-EN-14

The SV-matic weather compensator is fitted in the front part of the control panel. To do this:

- Remove the blank by cutting the surface with a stanley knife (1) following the black line and by breaking the perfo rations in the steel plate behind (2) with a pair of snips.
- Connect the two connections, situated behind the blank (3), to the back of the SVR unit: blue connector to the blue plug, red connector to the red plug.
- Locate the unit by its front and fix it using the two screws sited in the front part of the equipment (l/4 turn clockwise).

Caution: when a two stage SV-matic weather compensator type 322 DB is fitted, the resistor and the bridge respectively fitted between terminals 34 and 37, and 34 and 35 must be removed.

7.2 STANDARD CONTROL PANEL

The connections are made on the terminal strip in the control panel, accessible by opening the panel (3 screws at the back - see diagram).

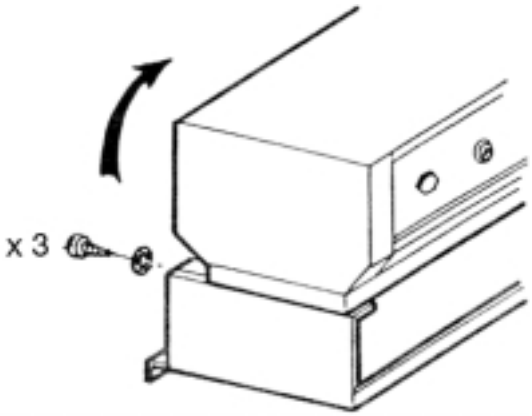

The connection cables are directed towards the front via the two cut outs in the rear panel of the boiler, and routed in the cable run to the control panel via the 2 rectangular cutouts in the front top panel.

8259N2

8 START UP

8.1 DELUXE (OPTION) - CONTROL PANEL

8.1.1 Presentation of the control panel

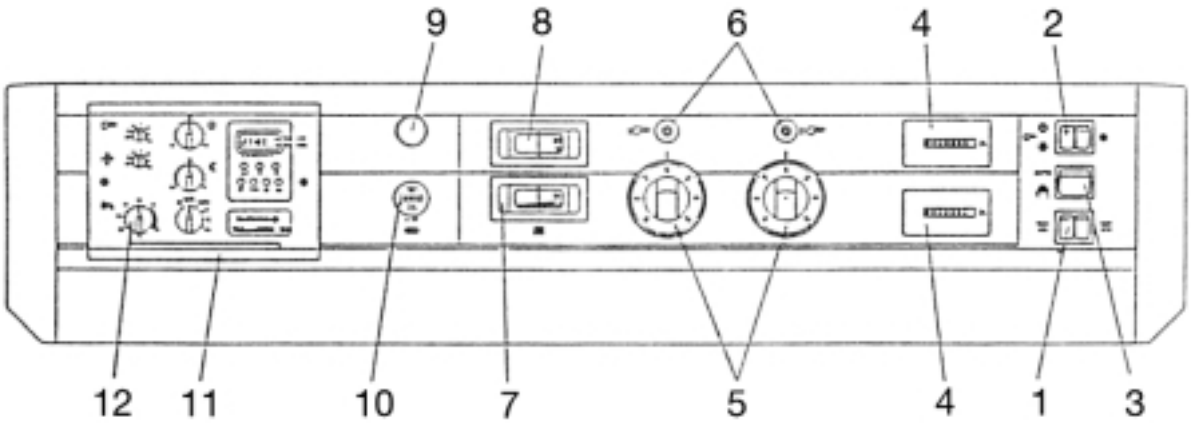

8219-EN-5B

1. **Double STB-STW switch**: to test the safety thermostat, press simultaneously on the two switches STB and STW (put the summer/winter switch **2** (▷) in «Summer», position "☼")

2. **Burner/Heating pump double switch**: Switch controlling the burner and heating pump.

- In «Winter», position ❄ the heating and the domestic hot water are on.

- In «Summer» position ☼,only the domestic hot water is on (if a calorifier is connected).

Where an SVmatic weather compensator is fitted or for a cascade installation, the two switches must be in «Winter» position ❄.

8.1 DELUXE (OPTION) - CONTROL PANEL (continued)

3. Auto/Manual switch:

- **AUTO**: automatic position, the position to be used in normal operation for boilers fitted with an SV-matic weather compensator or with an SVR module. The temperature of the boiler is adjusted by the control.

- **Manual M** ✋ : manual position, the position to be used for boilers **not fitted** with an SV-matic weather compensator or with an SVR module. The temperature of the boiler is adjusted by the first and second stage boiler thermostats 5. This position can be used to test the burner on an installation fitted with an SV-matic weather compensator.

4. Location for a hourrun meter if required for first or second stage

5. Boiler thermostat for first or second stage: graduated from 30˚C to 90˚C.
However, a pre-set integral temperature stop limits the temperature to 80˚C. This stop can be changed if necessary. To alter it, remove the thermostat button by pulling below and with pliers relocate the stop in the hole according to the temperature limit required.

Important: boiler thermostats must always be at maximum stop in the case where an SV-matic weather compensator is fitted or in cascade installations under the control of a boiler fitted with a «DIEMATIC-m» electronic control panel.

6. Indicator lamps for 1st and 2nd stage: these only light if the thermostat concerned or the control are calling for heat and the safety contact is closed.

7. Boiler thermometer.

8. Location for possible smoke thermometer.

9. Safety thermostat with manual reset (cut temperature: 100˚C).

10. Fuse 5 AT.

11. Location for SV-matic weather compensator or the possible SVR option (here SV-matic 232 DB shown in place).

For boilers connected to a domestic hot water calorifier.

12. Control rheostat for the temperature for the DHW sited on the SVR box or the type B SV-matic weather compensator (graduated from 20˚ to 80˚C - adjustment advised: 50˚C).

8.1.2 Operating instructions of the Deluxe control panel

- **Regulation of the boiler:**
  the boiler is controlled either by the boiler thermostats or by the SV-matic weather compensator (in option).

For boilers fitted with an SV-matic weather compensator the temperature of the boiler is controlled by the action of the regulator on the burner according to the external temperature. The boiler thermostats will be then set to maxi. Operating safety is ensured by the safety thermostat with manual reset.

- **Heating system regulation:**
  the heating system can be controlled in various ways (manual or motorised mixer valves, thermostatic taps, etc.) It is up to the installer to explain the operation of the heating controls to the customer.

For boilers fitted with an SV-matic weather compensator acting on a valve, heating temperature is adjusted by the regulator on a motorised mixer valve according to the outside temperature.

Regulation of domestic hot water:

- **with SVR option or SV-matic type B:**
  the temperature of the domestic hot water is adjusted by a rheostat 12 located on the SVR or SV-matic weather compensator. When the domestic hot water is heated, the burner and load pump start while the heating accelerator stops; the temperature of the boiler is then regulated by the limit thermostat incorporated in the SV-matic weather compensator or mounted on the SVR option (this thermostat is pre-set from factory at 80˚C).

Once the hot water demand is satisfied, the burner stops and the load pump continues to operate for 4 minutes after (timing adjustable from 30 seconds to 15 minutes). This enables the residual calories within the body of the heater to be used, and to complete the heating of the calorifier particularly in summer.

8.1 DELUXE (OPTION) - CONTROL PANEL (continued)

8.1.3 Start up

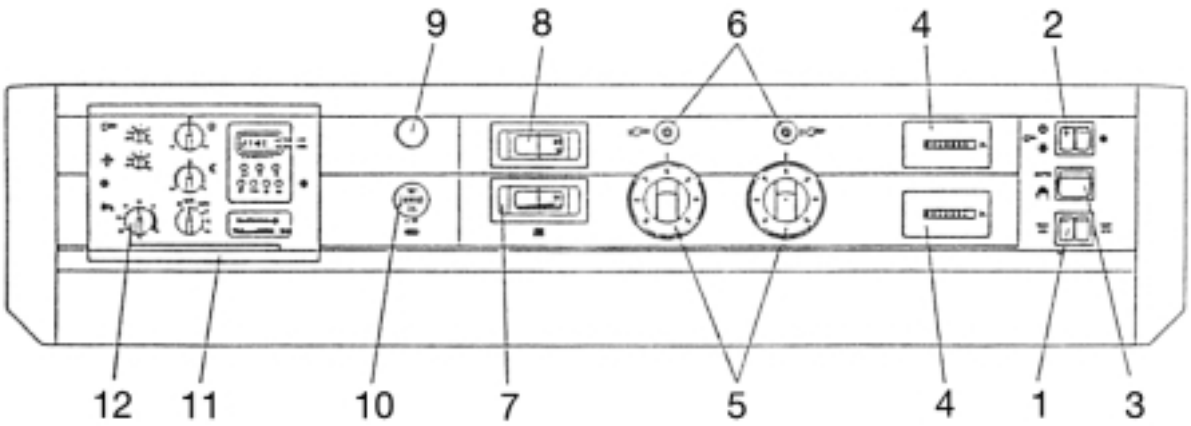

8219-EN-5B

Before starting the boiler, check that the installation is **properly filled with water**.
Make the start up adjustments in the following chronological order:

- Put the boiler thermostats **5** to the desired position (altering the position of the stop it necessary)

Important: for boilers fitted with an SV-matic weather compensator adjust the boiler thermostats to max.

- Put the domestic hot water thermostat **12** to the desired temperature (SVR or SV-matic options). The temperature of the hot water thermostat must always be lower than the setting on the first stage boiler thermostat (or of the limit thermostat in the unique case of the SVR option).

Put switch **3**:

- either on manual position ✋ boilers **not fitted** with an SV-matic weather compensator.
- or on automatic position **"AUTO"**: boilers **fitted** with an SV-matic weather compensator.

- Check that the safety thermostat **9** is not tripped. To do this, unscrew the hexagonal cap and using a suitable screw driver, press on the reset button.

- Put the burner/accelerator switch **2** on winter position " ❄".

IMPORTANT: in the absence of other settings, it is advised never to set the boiler thermostat under mark 4 (40°C) so as to avoid all risk of condensation inside the boiler.

8.2 STANDARD CONTROL PANEL

8.2.1 Control panel presentation

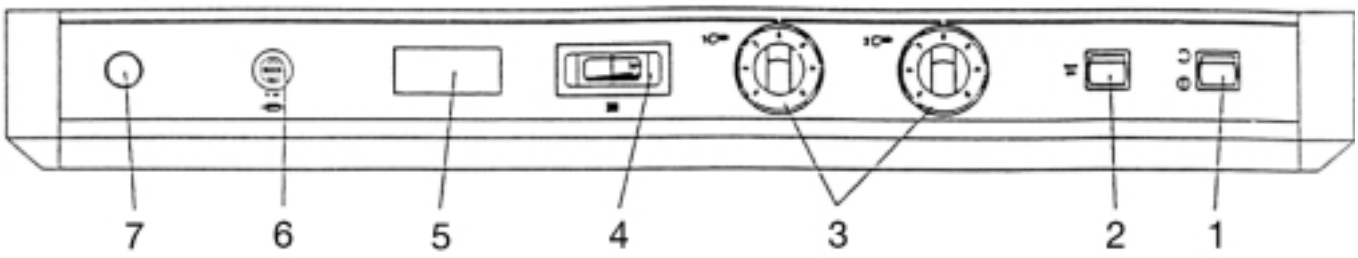

8219-EN-5

1. **Stop/Start** switch for the burner.
2. **STB test switch:** momentary action to test the safety thermostat.
3. **Boiler thermostat** first and second stage : graduated from 30° to 90°C. Integral pre-set stop limits the maximum temperature to 80°C. This stop can be adjusted if necessary. To adjust it, remove the thermostat button by pulling and use pliers to move the stop to the hole according to the temperature desired. The second stage thermostat must always be set to a lower value than the first stage thermostat.
4. **Boiler thermometer.**
5. **Location for possible smoke thermometer.**
6. **5 AT fuse.**
7. **Safety thermostat** with manual reset (factory set at 100°C).

8.2.2 Operating principle of the control panel

Adjustment and regulation of the boiler is done by boiler thermostats or by the adjustments on the external control unit, if there is one. Operating safety is ensured by the manual reset safety thermostat.

8.2.3 Start up

- Put the boiler thermostat **3** on the desired position (alter the stop position if necessary). Where a control unit is fitted, see directions supplied with this control unit.
- Check that the safety thermostat **7** is not tripped. To do this, unscrew the hexagonal cap and using a suitable screw driver, press on the reset button.
- Put the burner switch **1** on run.

Important: in the absence of other settings, it is advised never to set the boiler thermostat lower than mark **4** (40°C) so as to avoid all risk of condensation inside the boiler.

9.1 BOILER

It is not advisable to drain an installation, except in case of absolute necessity. Check regularly the water level of the installation and top it up if necessary, avoiding a sudden inlet of cold water into the hot boiler. This operation can only be done a few times a year; otherwise, look for the leakage and remedy it without delay.

The good performance of the boiler depends on its degree of cleanliness.

Cleaning of the boiler must be carried out as often as required and at least, as for the chimney once a year or more, according to the regulations in force. The following operations are always carried out with, the boiler and the power supply shut off.

• Cleaning of the flue gas circuit:
For this purpose:
- switch off the electricity.supply to the.boiler,
- unhook the front cover,
- open the sweeping door (uppet. door) by unscrewing the 4 lock nuts (17 mm spanner),
- remove the baffles,
- using the brush supplied, carefully sweep the 6 flue sections,
- also brush the baffles and the front face,
- if possible use a vacuum cleaner,
- put the baffles back in place **(pay attention to their direction),**
- shut the door.

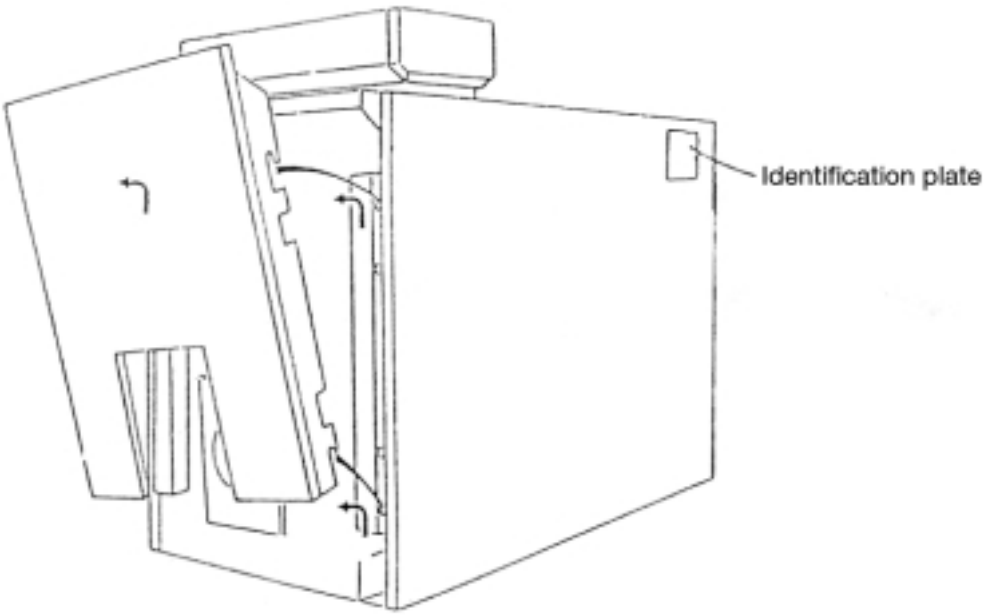

8219-EN-27

9.1 BOILER (continued)

- **Maintenance of the combustion chamber**

- open the combustion chamber door (lower door) by unscrewing the 4 lock nuts (spanner 17),
- brush the inside of the combustion chamber,
- using a vacuum cleaner, vacuum up the soot deposits accumulated in the combustion chamber,
- close the door and replace the front cover.

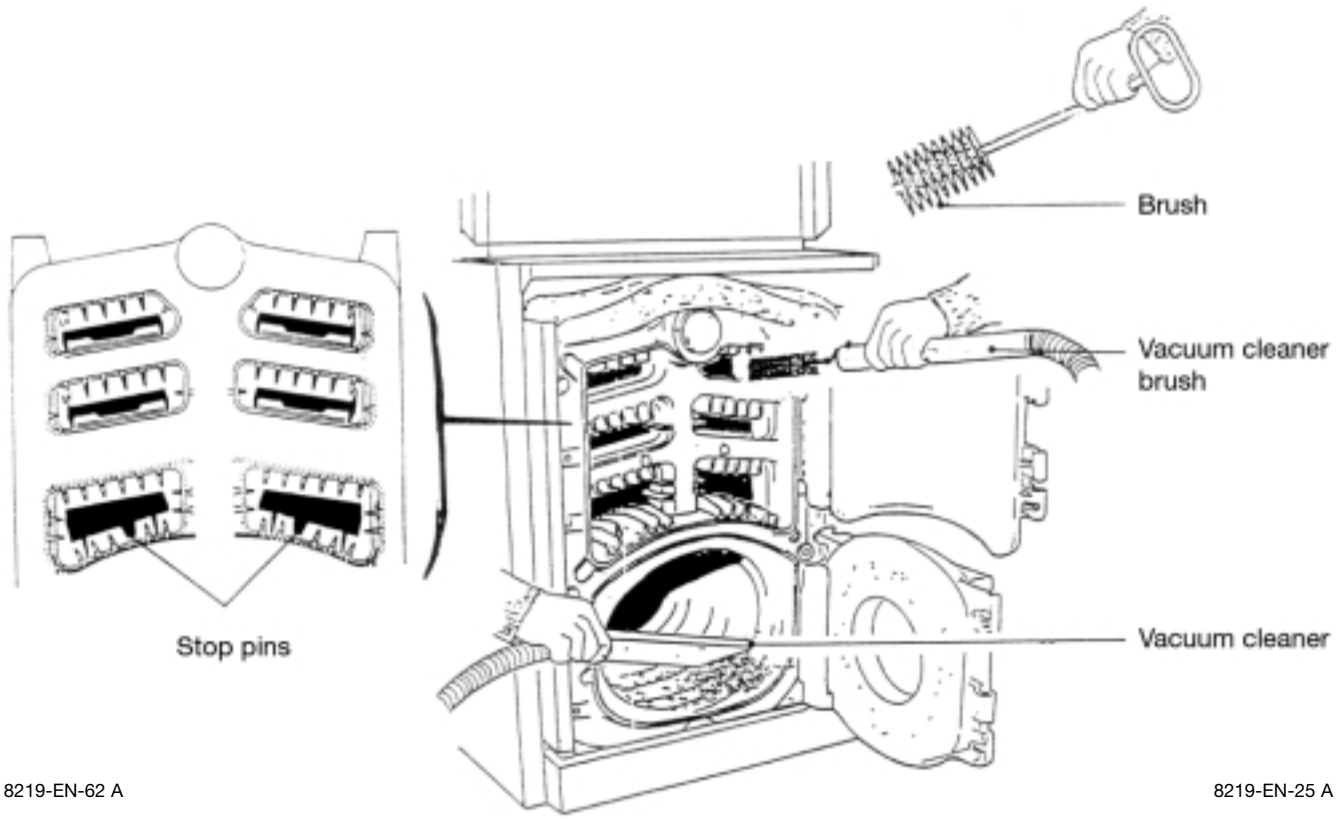

Baffles		Harrier GT 5	Harrier GT 6	Harrier GT 7	Harrier GT 8	Harrier GT 9
Upper	lg 410	8	8			
	lg 570			4	4	4
Lower	lg 412			4		
	lg 572	2	2		2	2

9.1 BOILER (continued)

- **Cleaning the smoke box (Flue Hood)**

For this purpose:
- remove the sweeping left and right hand covers of the smoke box (2 wing nuts) and remove the soot using a vacuum cleaner,
- replace the sweeping covers.

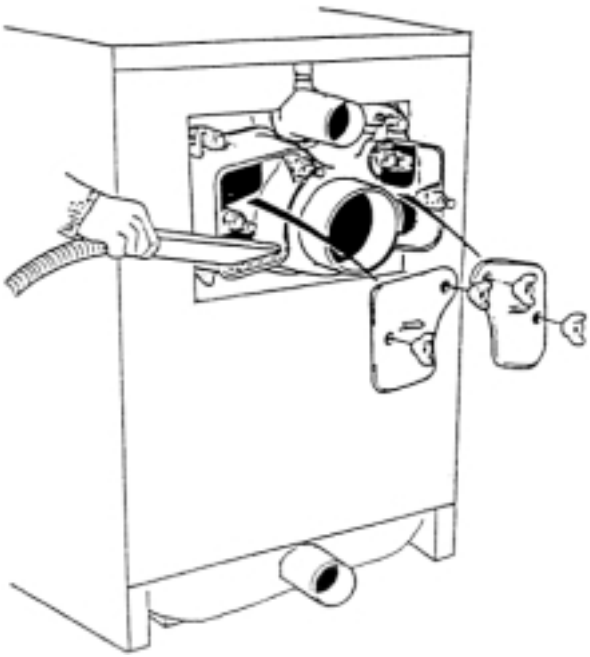

- **Burner maintenance**

In accordance with the instructions supplied with the burner.

8219-EN-26

9.2 PRECAUTIONS TO BE OBSERVED IN CASE OF VERY LONG STOP OF THE BOILER

- The boiler and the chimney must be carefully swept.
- Shut the boiler doors to avoid any air flow inside.
- If the boiler is going to be stopped for several months we also advise removing the flue connection off the nozzle and to close the nozzle with a cover.
- In case of stop of the heating in winter leading to risks of freezing, we advise the use of a concentrated antifreeze agent to prevent the heating water from freezing. Otherwise, completely drain the installation.

10.1 DATA TABLE

General Data

Boiler size (no. of sections)		Harrier GT 5	Harrier GT 6	Harrier GT 7	Harrier GT 8	Harrier GT 9
Maximum heat output	kW	140	180	230	280	330
	Btu/h x 10^3	477	614	785	955	1126
Minimum heat output	kW	105	140	180	230	280
	Btu/h x 10^3	358	477	614	785	955
Combustion chamber volume	m^3	0.122	0.148	0.174	0.2	0.226
	ft^3	4.3	5.2	6.14	7.06	7.98
Flue way volume	m^3	0.206	0.249	0.292	0.335	0.378
	ft^3	7.27	8.79	10.31	11.83	13.35
Boiler water content	l	116	136	156	176	196
	gal	25.5	29.9	34.3	38.7	43.12
Hydraulic resistance at 15 k	mbar	10.9	20.4	30	44.5	63.8
	in.w.g	4.36	8.16	12	17.8	25.52
Combustion chamber resistance	mbar	0.6	1.1	1.6	2.2	2.5
	in.w.g	0.24	0.44	0.64	0.88	1
Boiler dry weight less burner unit	kg	608	694	791	886	977
	lb	1340	1530	1744	1953	2153

Oil Firing Data

Boiler size (no. of sections)		Harrier GT 5	Harrier GT 6	Harrier GT 7	Harrier GT 8	Harrier GT 9
Maximum oil rate	l/h	14.26	18.34	23.43	28.53	33.59
	gal/h	3.14	4.03	5.16	6.27	7.39
Maximum flue gas volume	l/sec	88.9	114	146	177.5	209.2
	ft^3/min	188.4	241.8	309.6	376.2	443.4

Gas Firing Data

Boiler size (no. of sections)		Harrier GT 5	Harrier GT 6	Harrier GT 7	Harrier GT 8	Harrier GT 9
Maximum gas rate	m^3/h	14.54	18.7	23.9	29.1	34.3
	ft^3/h	513	660	844	1027	1211
Maximum flue gas volume	m^3/sec	0.087	0.11	0.14	0.17	0.2
	ft^3/min	184.3	233	296	360	424

Data Notes

Fuel rates and flue gas data relates to maximum outputs ratings.
Gas firing data relates to the use of NATURAL GAS ONLY.
Details for the use of LPG are available, on request, to Caradon Ideal Ltd.
The gas rate at calorific values differing from the standard quoted above may be calculated by direct proportion.
CALORIFIC VALUE; 38.5 MJ/m^3 (1035 btu/ft^3).

10.2 MAIN DIMENSIONS

8219-EN-7 B

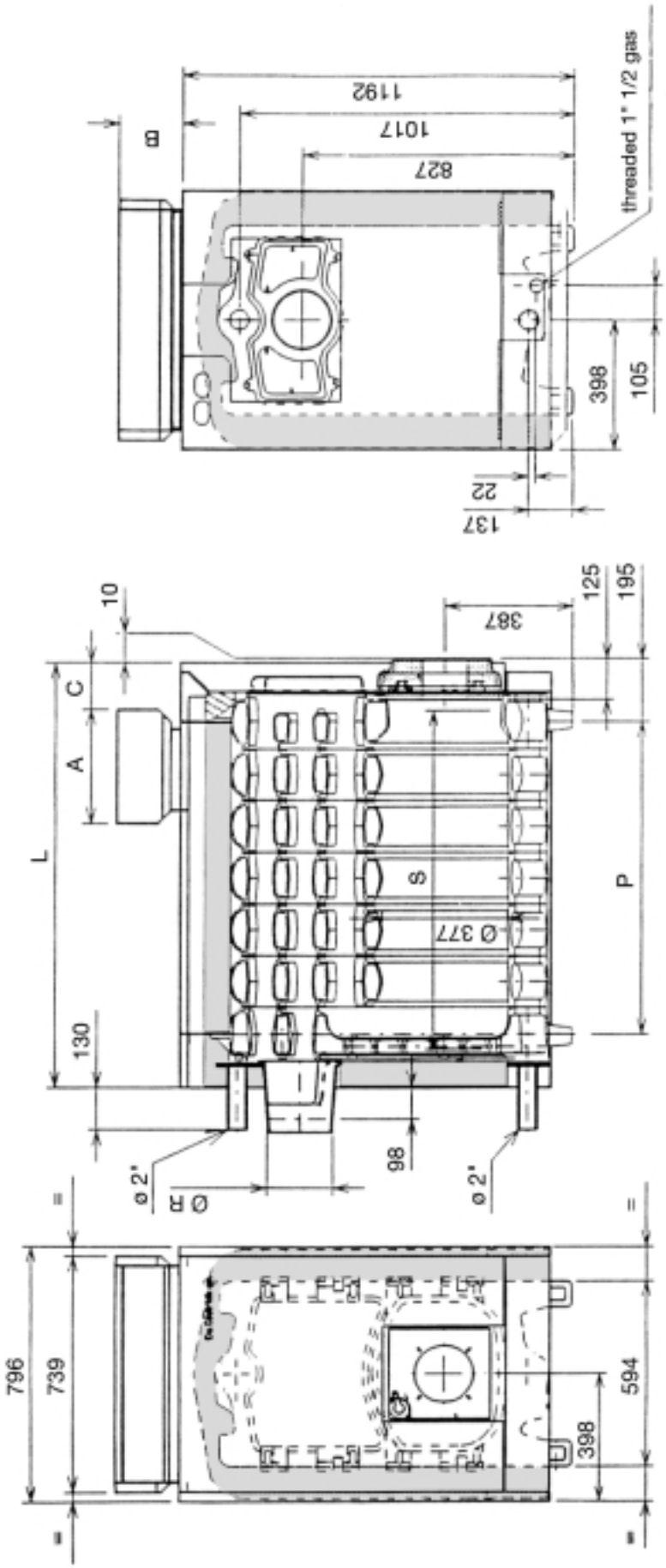

No. of sections		Harrier GT 5	Harrier GT 6	Harrier GT 7	Harrier GT 8	Harrier GT 9
Standard control panel	A	130	130	130	130	130
	B	105	105	105	105	105
	C	165	165	165	165	165
E + Diematic control panel	A	355	355	355	355	355
	B	195	195	195	195	195
	C	145	145	145	145	145
↔	L	968	1128	1288	1448	1608
↔	P	650	810	970	1130	1290
	ø R	180	180	200	200	200
	S	730	890	1050	1210	1370

ORDER OF ASSEMBLY

The order of the assembly is given by the numbers shown at the bottom of each of the different views; for boilers delivered with the **body assembled**, begin at view **10**.

- **Tools necessary:**
- 1 cross head screw driver
- 1 hammer
- 1 knife
- spanners of 8, 13, 17 and 19 mm
- 1 putty application gun
- 1 JD- TE, or W simplified installation tool
- 1 jumper bar
- 1 pipe wrench
- 1-35 mm spanner or a parallel groove clamp

Remark: spare screws, etc. are provided.

1

- Establish the **A** or **B** dimensions depending on the direction in which the burner door will be opened and the length of the burner (see instructions § 2.1)
- Put the rear section into position and support it. If applicable, fit the adjustable feet (see § 2.2 of this document).

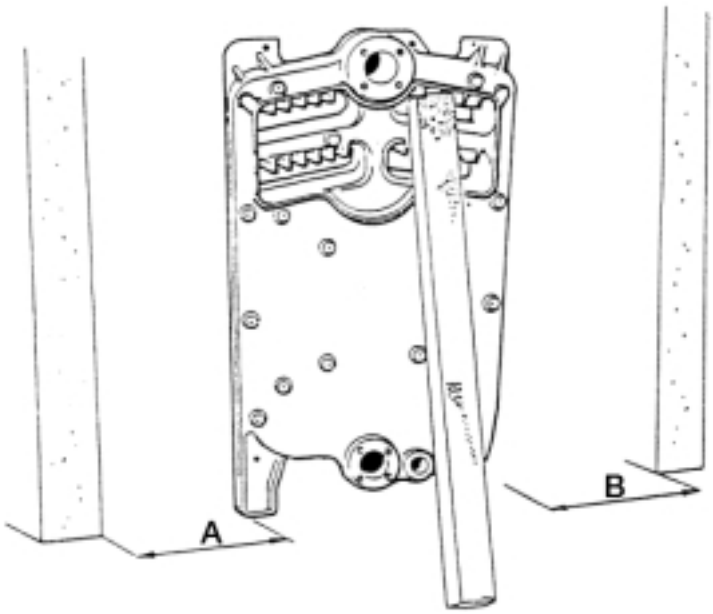

8219-EN-28

2

BP 7 à/to 12

- Clean bores and nipples with a diluent. Coat them with the lubricant provided with the sections.

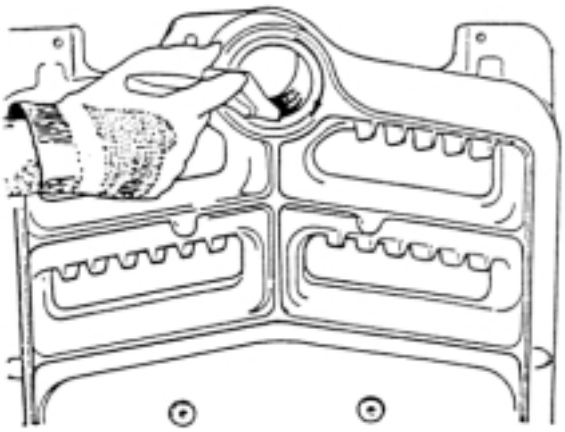

8219-EN-29

3

- Drive in the nipples slightly using a piece of wood A to avoid damaging them.

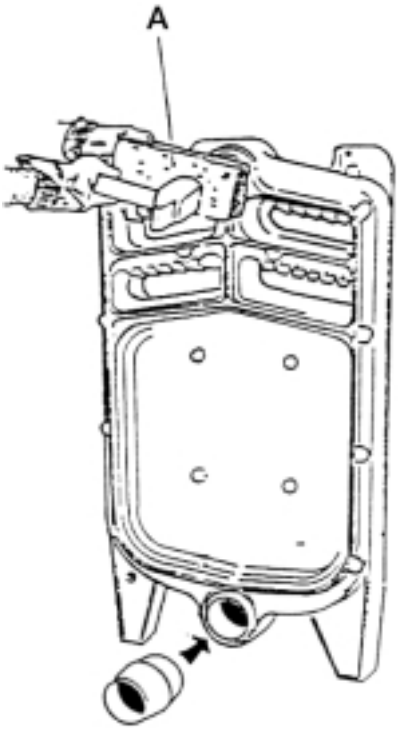

8219-EN-30

4

- Put the silicone thermocord into place in the rear section using a few spots of silicone sealant.

Respect the junction point indicated in the drawing.

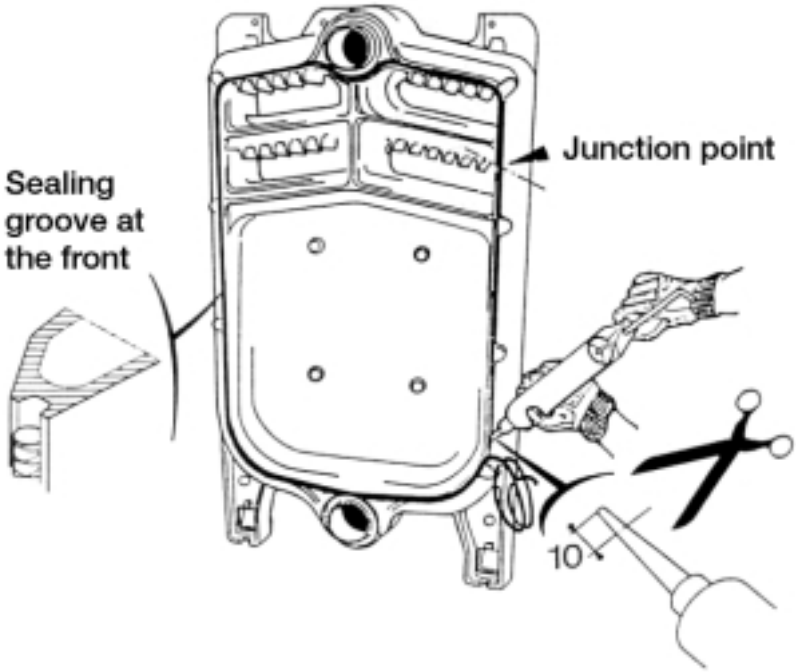

8219-EN-31 C

5

- Put two wooden chocks of 170 mm in height into position.
- Move the first intermediary section so that it is facing the rear section, **make sure to place it in the correct way ie. the sealing groove against the thermocord**. Drive in the two nipples lightly and af the same time using a hammer and a piece of wood, checking that thig nipples are aligned with the bore before tightening.

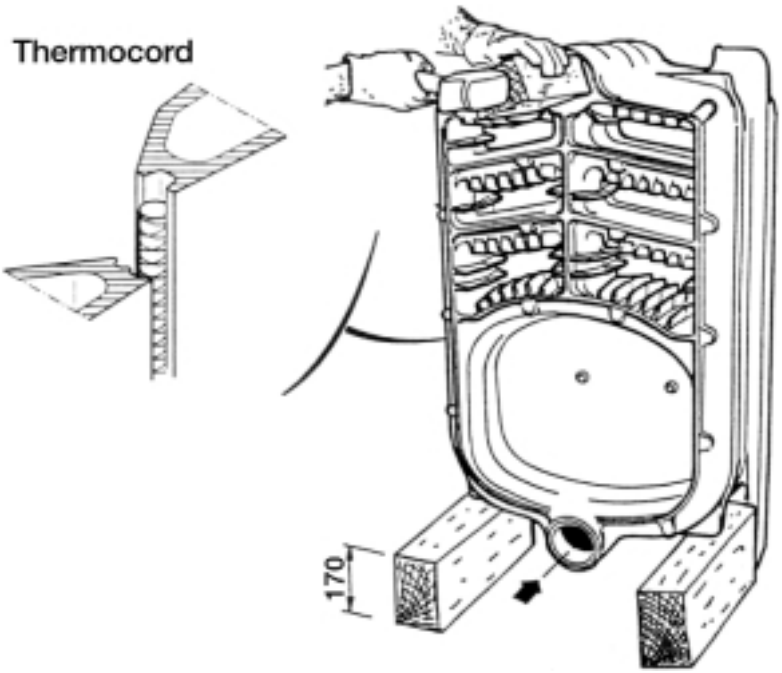

8219-EN-30 A

6

- Put the assembly tool into position.
- Tighten progressively so that the upper and lower connections are brought together.

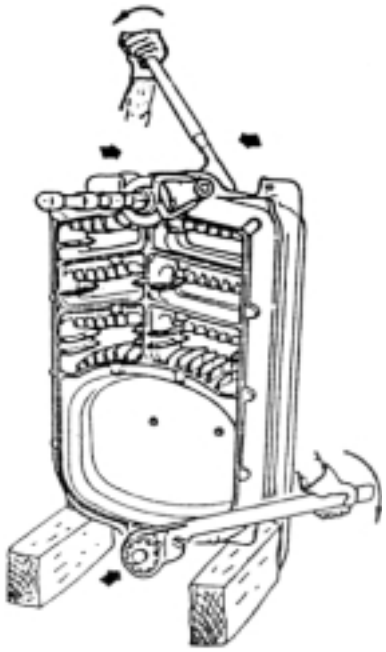

8219-EN-33 B

7

- Fit the rest of the intermediary sections **(one by one)** by repeating the procedure shown in drawings 2, 3, 4, 5 and 6.
- Each time that two or three sections have been tightened, slide the chocks forward using the jumper bar to raise the boiler.

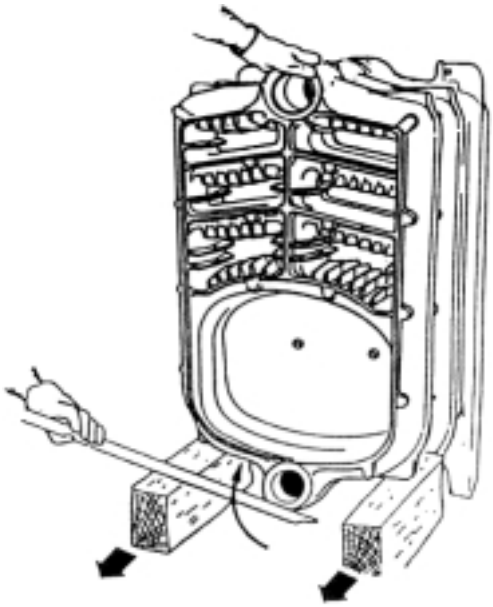

8219-EN-34

8

- Put the front section into position and tighten using the assembly tool, leave the assembly tool in position. -
- Remove the 170 mm high chocks.
- Fit the three assembly rods (with dia.12 washer and H12 nuts - 19 mm spanner). The washers are to be found in the covering pack (tightening torque 10 Nm).
- Remove the assembly tool.

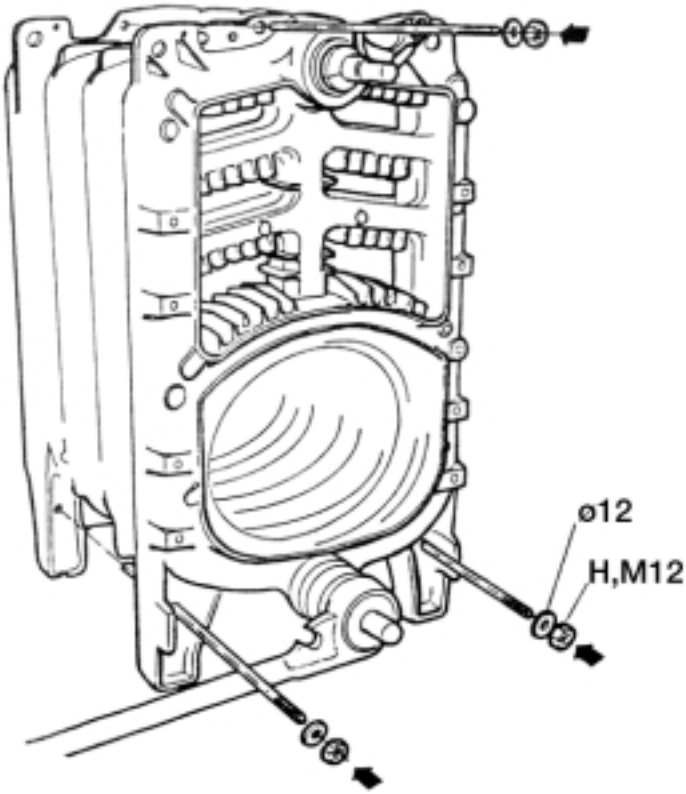

8219-EN-35 C

9

- Using the pipe wrench, fit the 4 M8 studs and the 8 M10 studs for the flanges (the shorter thread is to be screwed into the section).
- Attach the outlet and return flanges using 4 H10 nuts for each flange (17 mm spanner) and place a sealing gasket in between each time. For the GT 8/9, the return flange is replaced by a flange with water balancing tube.
- Fit the flue outlet onto the complete heating body (4 H8 collar nuts - 13 mm spanner).

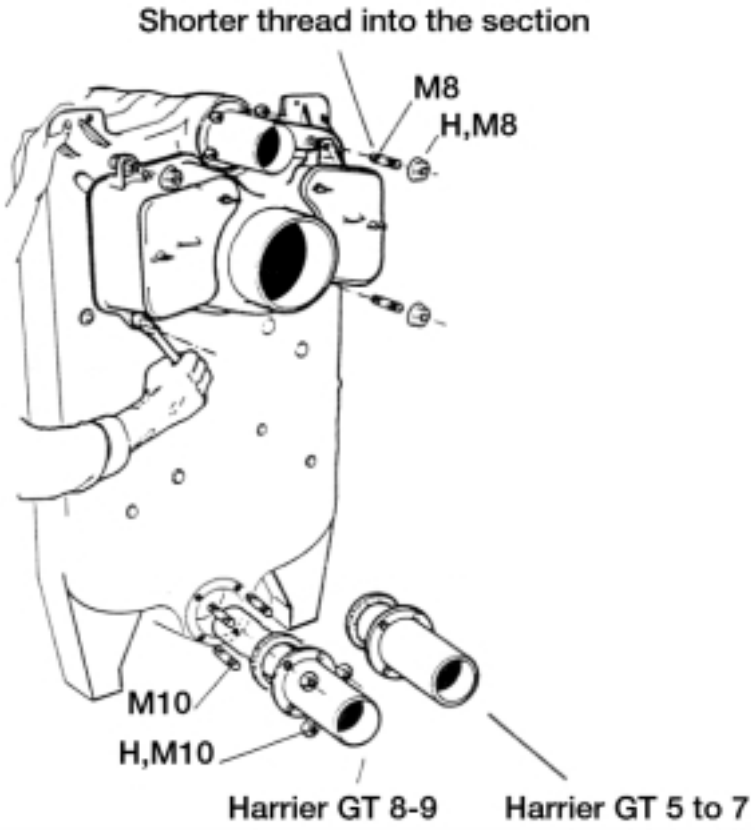

8219-EN-37

10

BP 13, BP 14 or BP 26

- Using the pipe wrench, fit the studs **A** and **B** to the front face (19 mm spanner). The shorter thread is to be screwed into the section.
- Attach the hinge **C** of the burner door on the right or left with 2 H12 nuts and 2 DE 12 lockwashers (19 mm spanner) on the 2 lower studs.
- Put the burner door into place with its pin D.

A = M 12 x 50
B = M 12 x 80

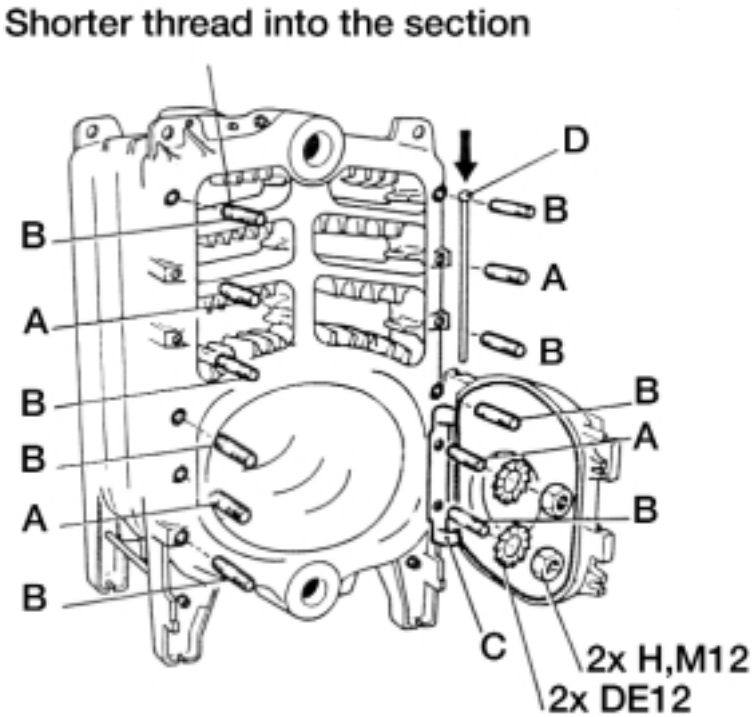

8219-EN-39 B

11

- If the orifice on the burner door needs to be enlarged, proceed as per the drawing.
- Remove the first segment with a chisel.
- and the other segments with an adjustable spanner.
- Adjust the thermal insulation of the burner door according to the burner.

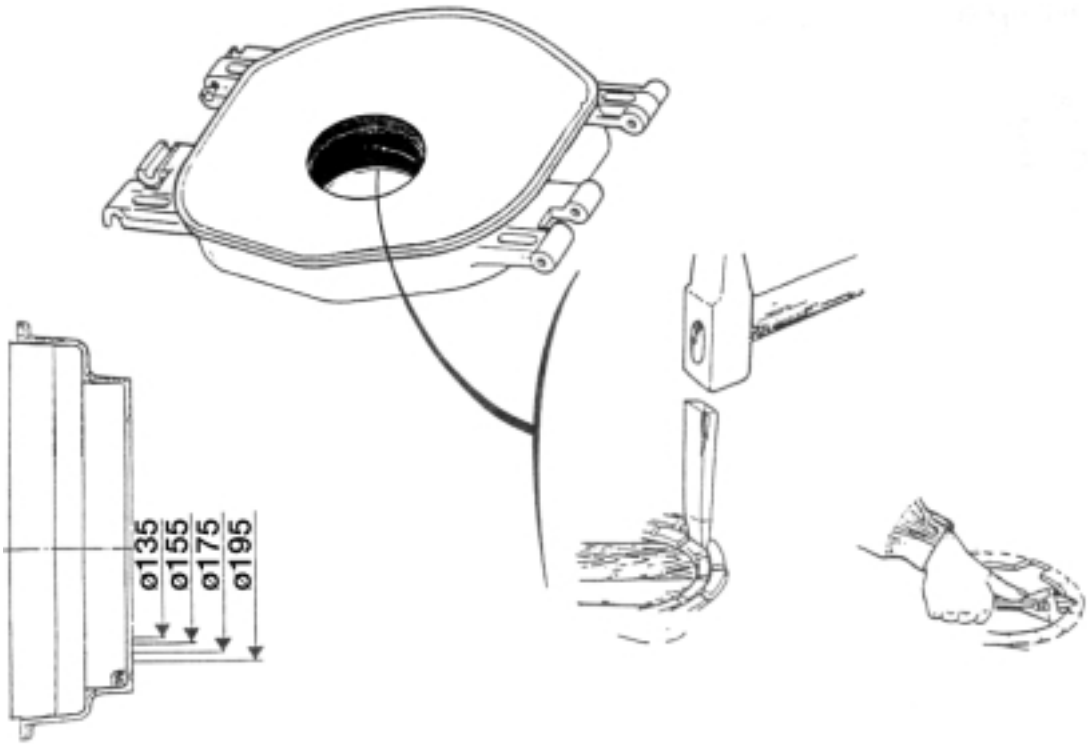

8219-EN-60

12

- Fit the door guide flap **A** on the opposite side to the hinge using 2 H12 nuts + DE12 lockwashers.
- Fasten the burner door **B** with 4 H12 nuts and CL 14 washers.
- Fix the hinge **C** of the sweeping door at the right or left hand side on the 2 lower pins using 2 H 12 nuts and washers - 19 mm spanner.
- Put the sweeping door into place along with its pin **D**.

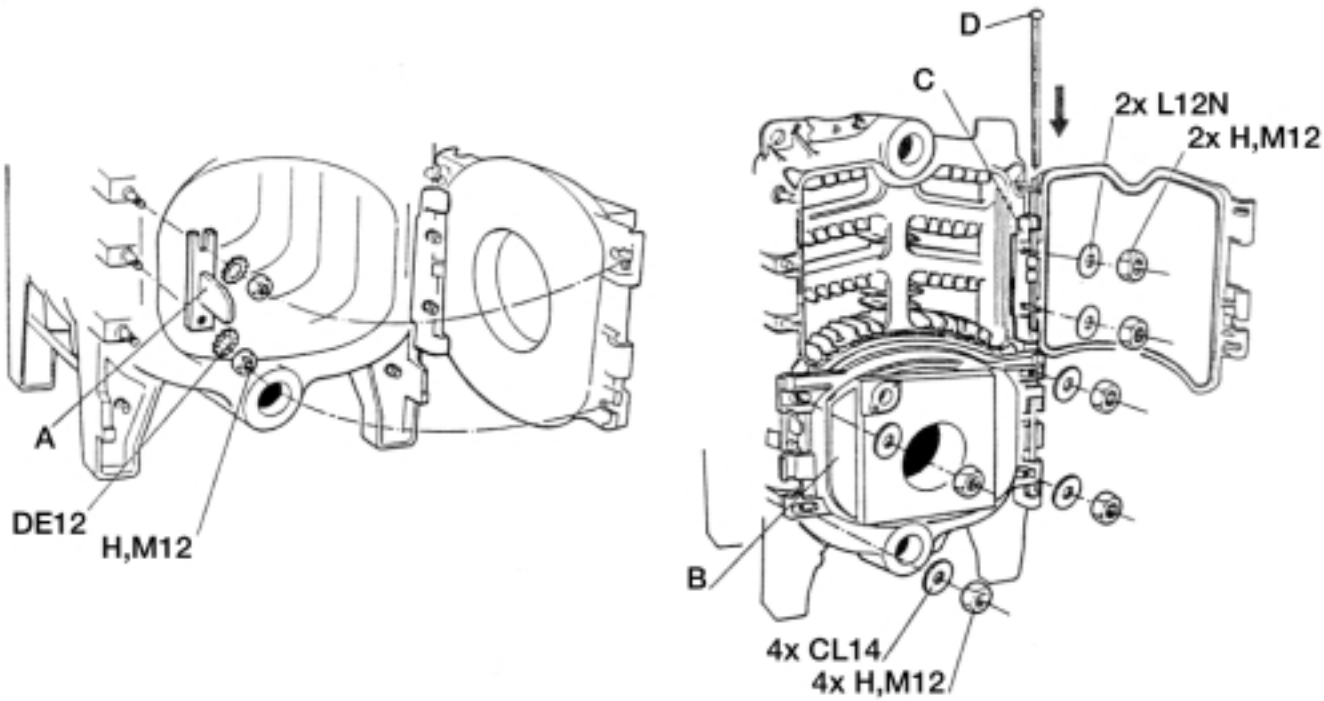

8219-EN-40 B

13 MOUNTING OF UPPER BAFFLES

Pay attention to the way to place the baffles

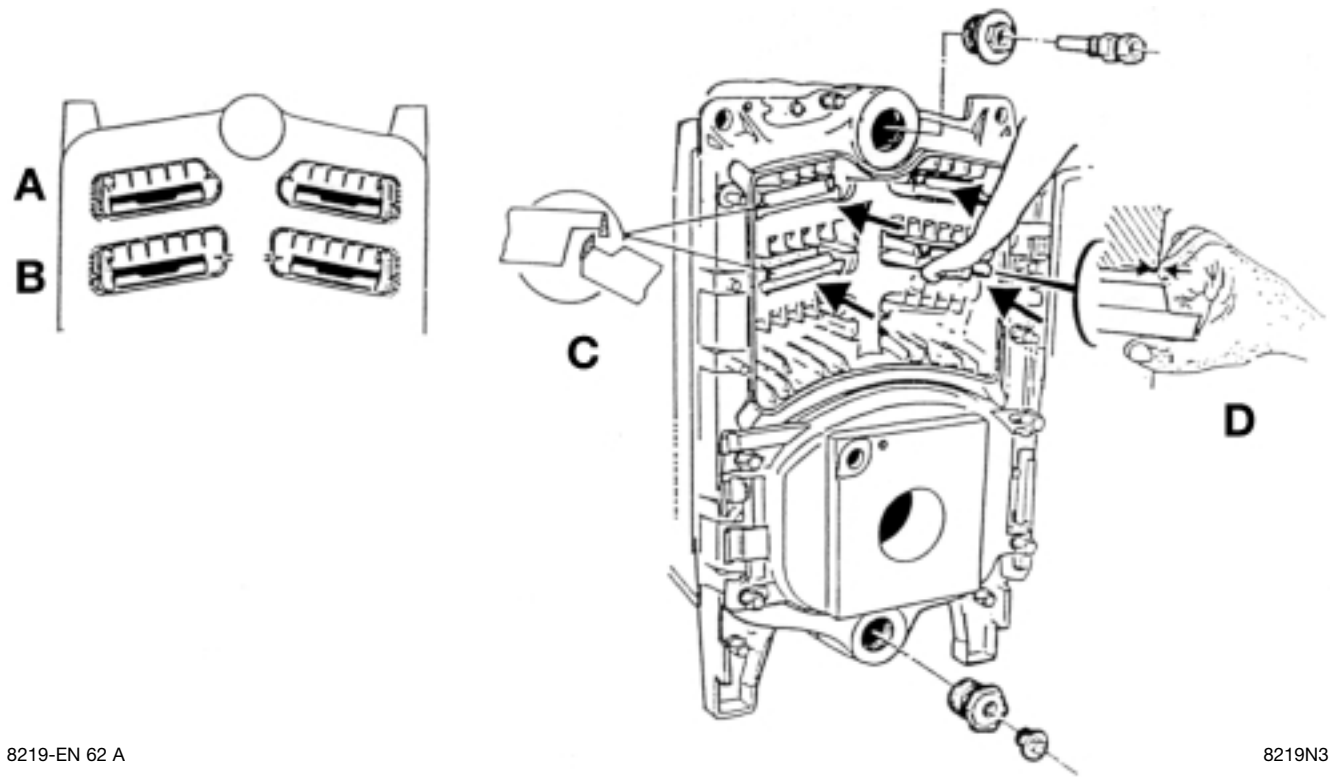

Baffles Table

Upper Baffles		Flue Ways	Harrier GT 5	Harrier GT 6	Harrier GT 7	Harrier GT 8	Harrier GT 9
	- lg 410	A+B	8	8	4		
	- lg 570	A+B			4	8	8

ID 17 to 21

- Fit the lower 2”1/2 - 1”1/2 reducer along with its 1”1/2 plug or a quick opening valve (not supplied) for sludge removal.
  Do not forget the hemp.
- Fit the upper plug using the small sleeve (35 mm spanner or parallel groove clamp).
- Fit the baffles of the 4 upper flue ways **A** and **B**, interlock the baffles one into another before placing them in the flue way (see detail **C**). Insert them until your hand touches the front section - (detail **D**).

14 MOUNTING OF LOWER BAFFLES

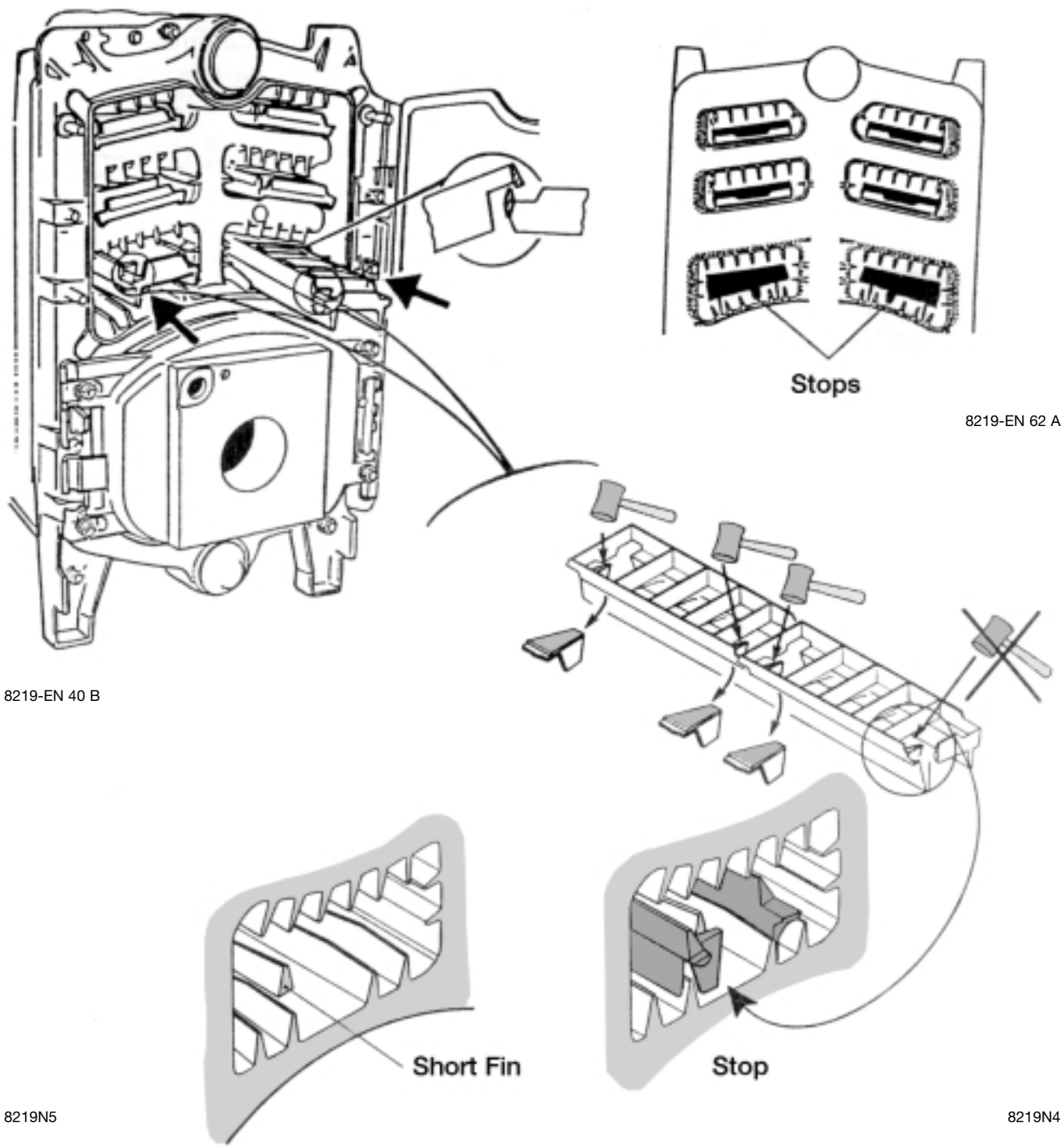

Baffles Table

Lower Baffles		Harrier GT 5	Harrier GT 6	Harrier GT 7	Harrier GT 8	Harrier GT 9
	- lg 412			4	2	
	- lg 572	2	2		2	4

- Break all the stops of the baffles using a mallet for instance, except the stop at the front (see figure).
- Fit the baffles of the 2 lower flue ways placing the 2 last baffles until the stop is reached - detail E (see leaflet provided with the baffles).
- Close and fasten the door (4 H 12 nuts + 4 L 12N thick washers - 19 mm spanner).
- **After assembly of the body, the installer should carry out a water pressure test to 5.2 bar.**

15

To be cut out for GT 5-6

- Place the two Cordostraps on the ground underneath the boiler.
- Put the body insulation into position from the left -glass wool to the outside- (in two parts from GT 8 onwards). See drawing.

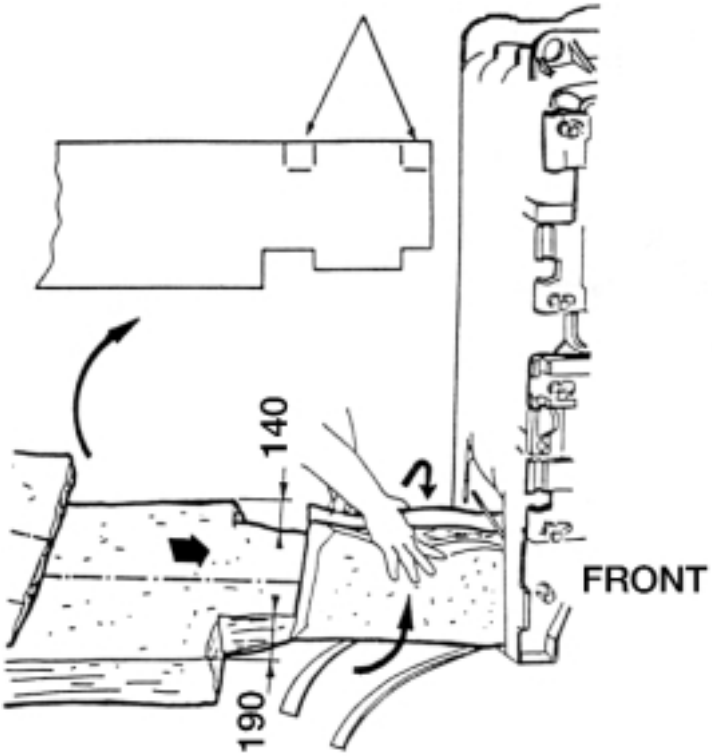

8219-EN-43

16

- Encircle the insulation with the 2 Cordostraps and buckles and tighten.
- Attach the clips to hold it all in place.
- Fit the rear insulation and hold it in place using clips as per the diagram.

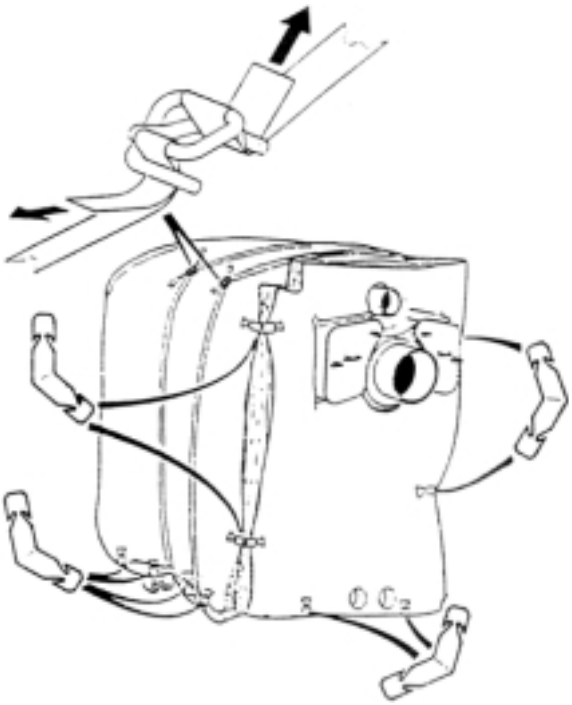

8219-EN-44

17

- Place the two upper transversal parts into position with 2 M12 x 40 bolts, 2 H12 nuts and 2 dia. 12 mm lockwashers, and the lower brackets with 4 M8 x 12 bolts and 4 DE8 lockwashers - 13 mm spanner.

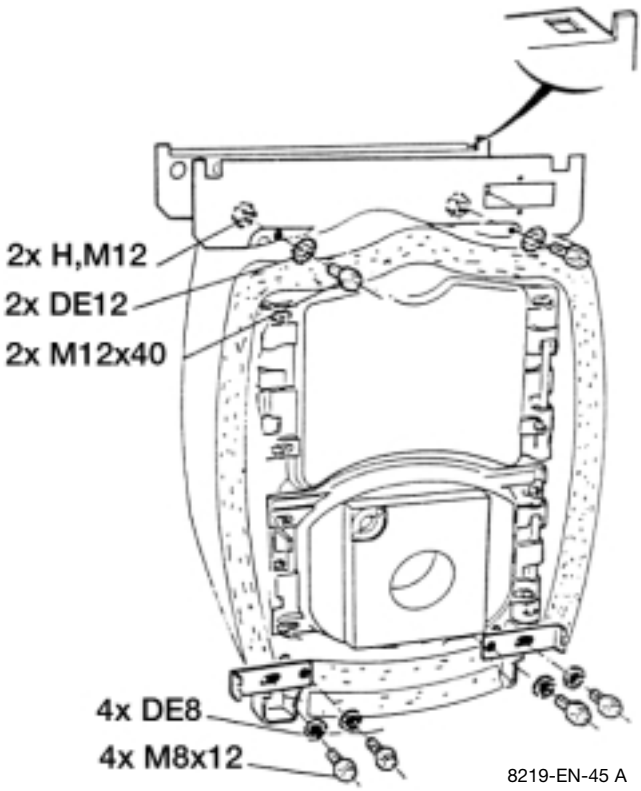

8219-EN-45 A

18

- Hook the side panels onto the transversal parts. Ensure that the insulation slides behind this protection.
- Screw the side panels onto the transversal parts (2 A45 screws + 2 DE5 washers - 8 mm spanner).
- Slide the wiring duct between the transversal parts and fit the rubberproffle strip.
- Fit the wiring duct end cap on the front transversal part using 2 screws dia. 3.94 x 12.7.

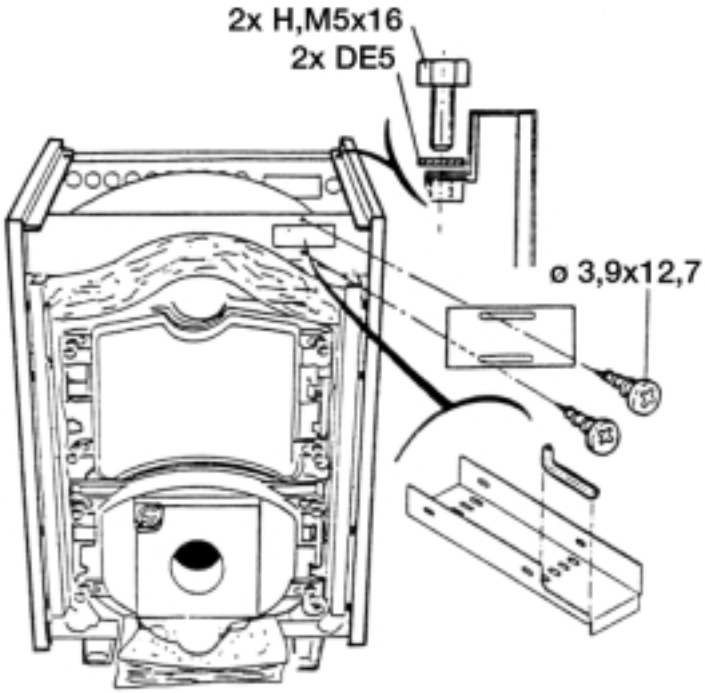

8219-EN-47

19

- Put the upper rear panel into position (6 clips).
- Put the lower rear panel into position (4 self tapping screws dia. 3.9 x 12.7 + DE4 lockwashers - cross head screwdriver).

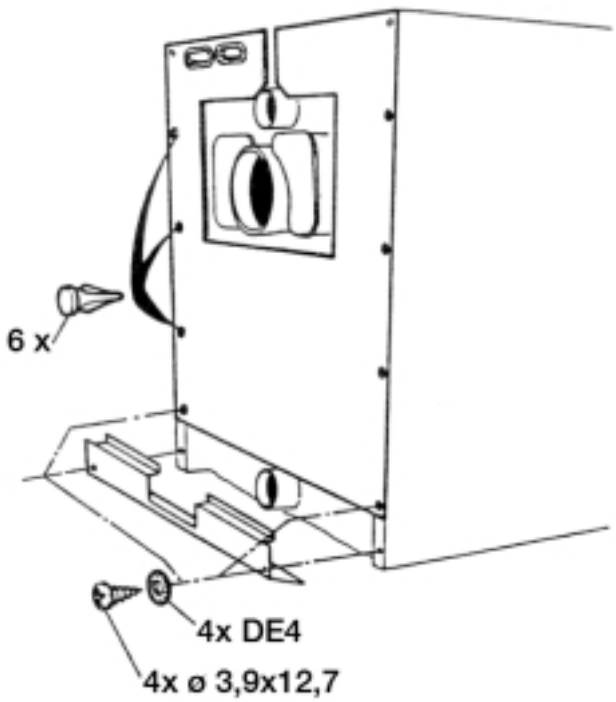

8219-EN-54 A

20

- Hook the front top panel into the side panel rivet studs.
- Pass the different connection cables through the orifices in the rear panel and direct them through the wiring ducts (the 230 V cables on one side and the sensor cables on the other) and bring them to the front via the cut out in the front top panel. (See technical instructions chapter 7 for the E and standard control panels or the instructions particular to the DIEMATIC if applicable).

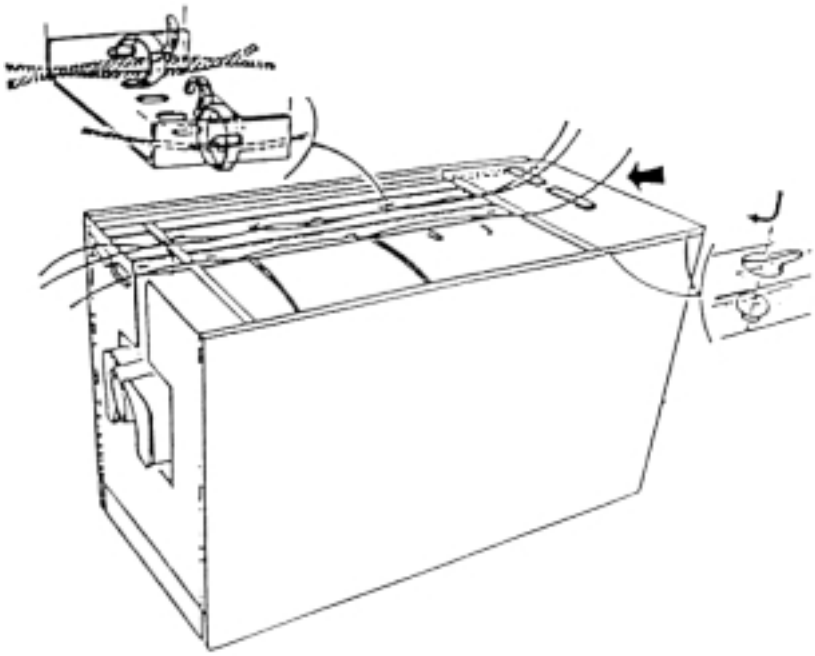

8219-EN-48

21

BP 22 - 23 - 24

- Fit the control panel and pass the burner cable (optional on the standard control panel) through the orifice provided in the top panel, then bring it down inside the fold of the right hand protective sheet metal strip of the insulation to the burner (if it is too long, push it back between the front panel and the insulation).

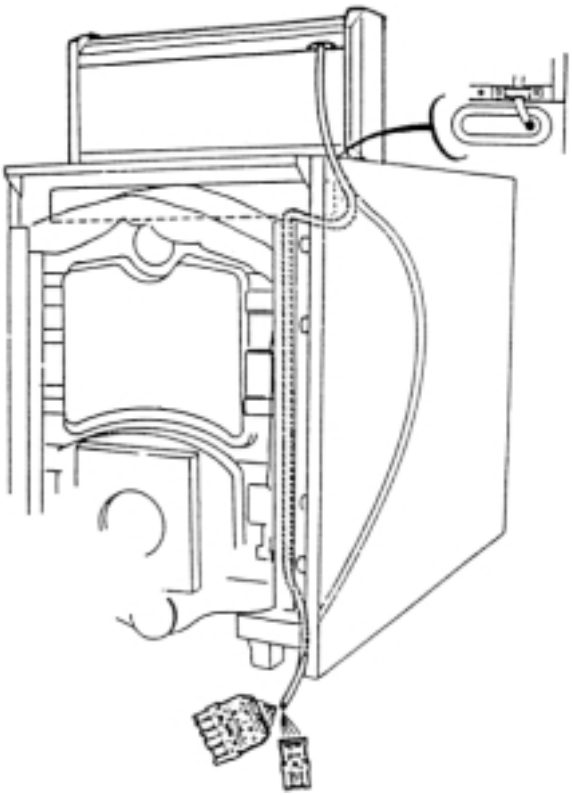

8219-EN-49

22

- Screw the side panels to the angle brackets (2 DE5 lockwashers + M5 bolts - 8 mm spanner). The burner cable must pass behind the angle bracket.

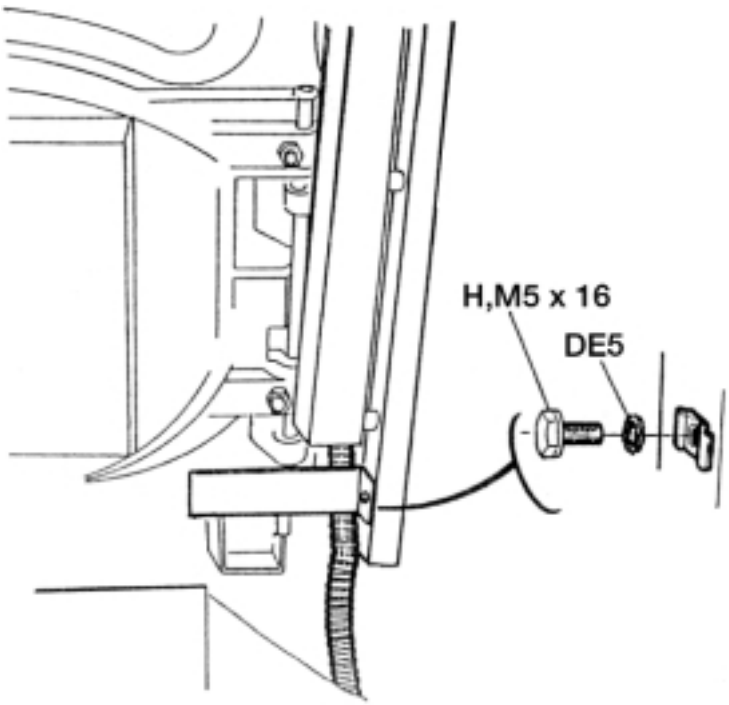

8219-EN-50

23

- Attach the lower cable - cut it if necessary.

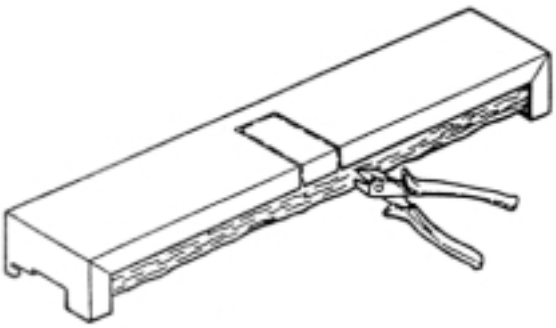

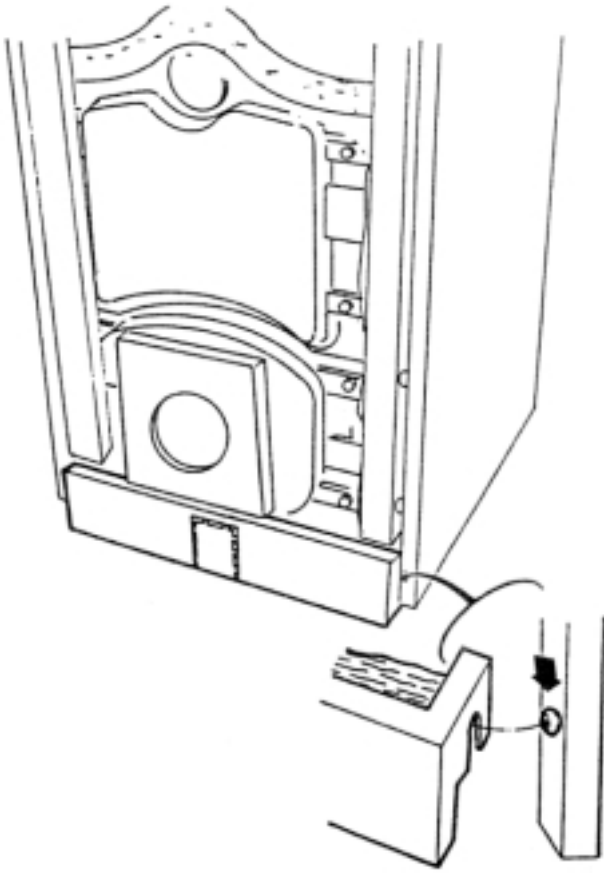

8219-EN-51

24

Deluxe control panel
- Position the control panel in the rear rivet studs.
- Open the control panel by unscrewing the two self tapping screws on the front.

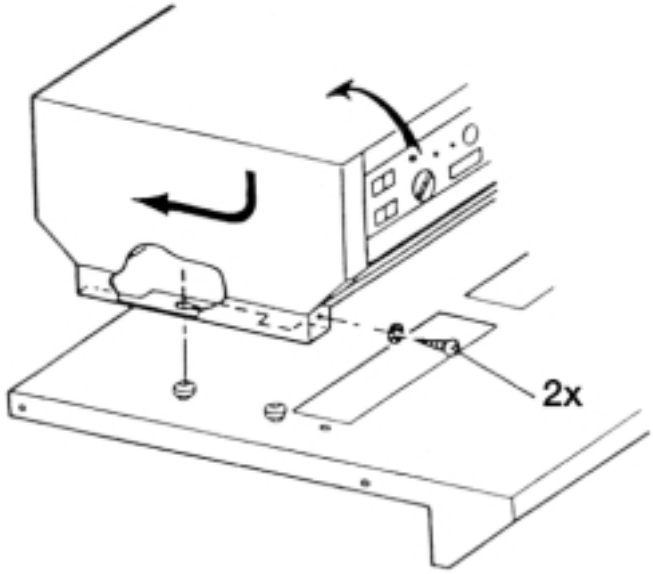

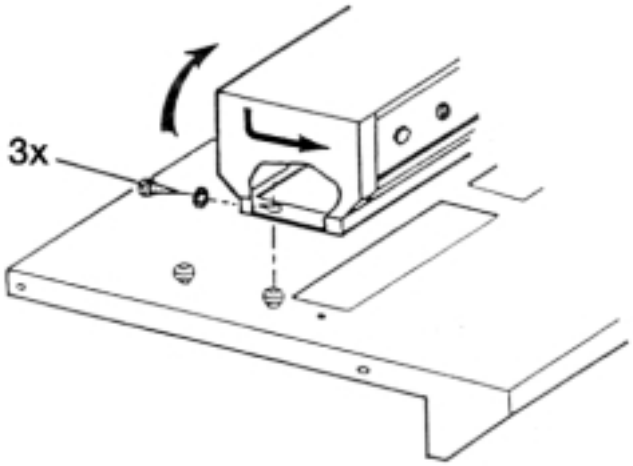

Standard control panel
- Position the control panel in the front rivet studs.
- Open the control panel by unscrewing the three screws at the rear.

8219N16

25

Deluxe control panel
- Screw the front of the control panel to the top panel using two self-tapping screws of dia. 3.94 x 12.7 + lockwashers (cross head screwdriver).
- Carefully unwind and remove the various bulbs of the control panel by passing them through the orifice of the front top cover Insert them into the small pocket and maintain them there with the use of a spring.

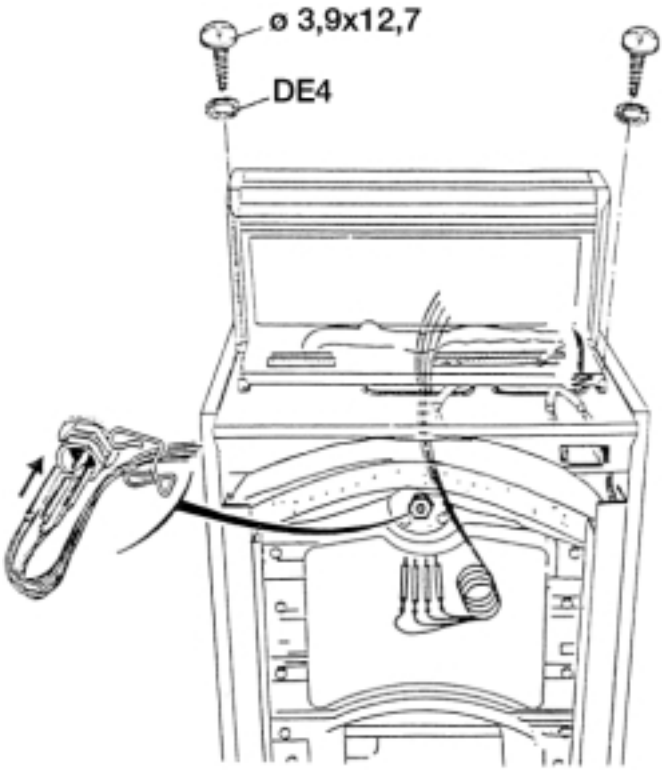

8219-EN-53

26

Standard control panel

- Screw the rear of the control panel to the top cover using two self-tapping screws of dia. 3.9 x 25 + lockwashers (cross head screwdriver).

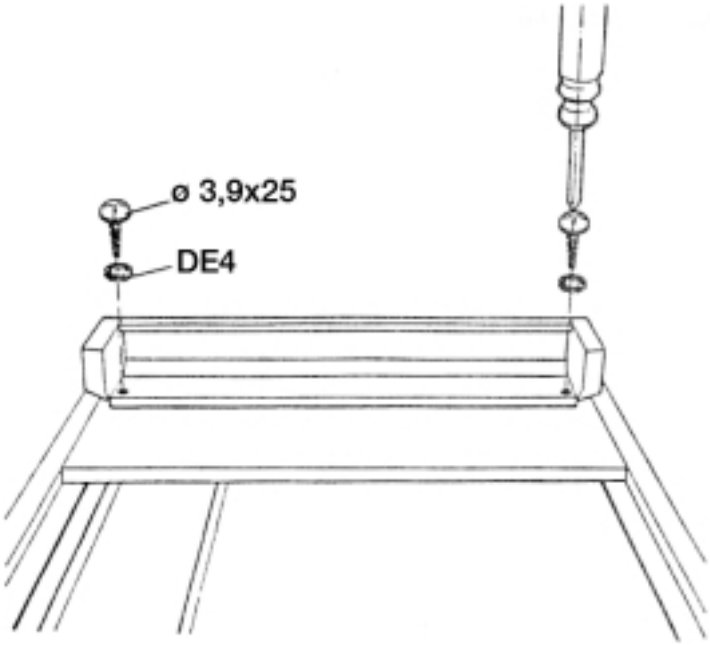

8219-EN-65

27

Standard control panel

- Carefully unwind and remove the various bulbs of the control panel by passing them through the orifice of the front top cover. Insert them into the small pocket and maintain them there with the use of a spring.

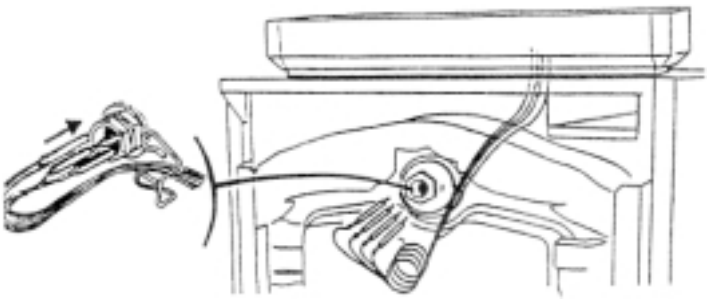

8219-EN-66

28

- Make the electrical connections to the terminal blocks provided for this purpose inside of the control panel. See chapter 7 of the instructions for the standard and E control panels or the instructions particular to the DIEMATIC. Close the control panel (2 self-tapping screws + lockwashers).

29

- Hook on the front panel.

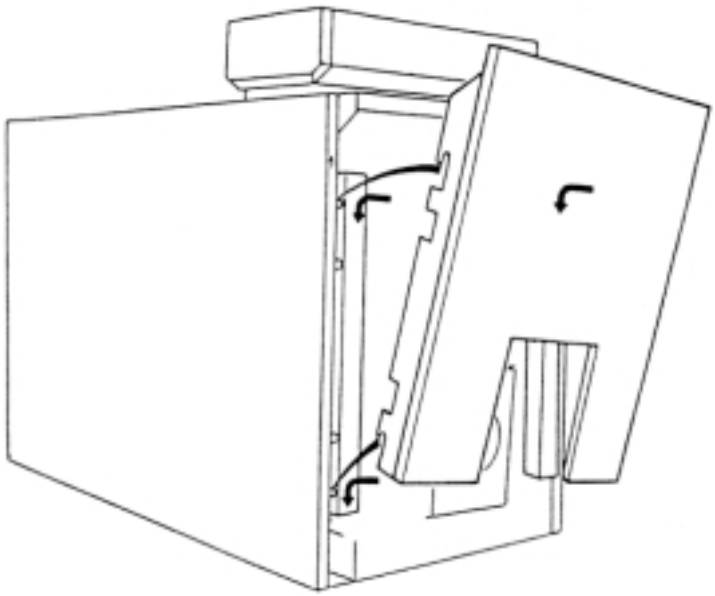

8219-EN-55

30

- Hook on the rear front cover and fasten it at the rear using two self-trapping screws of dia. 3.9 x 12.7 + DE4 lockwashers.

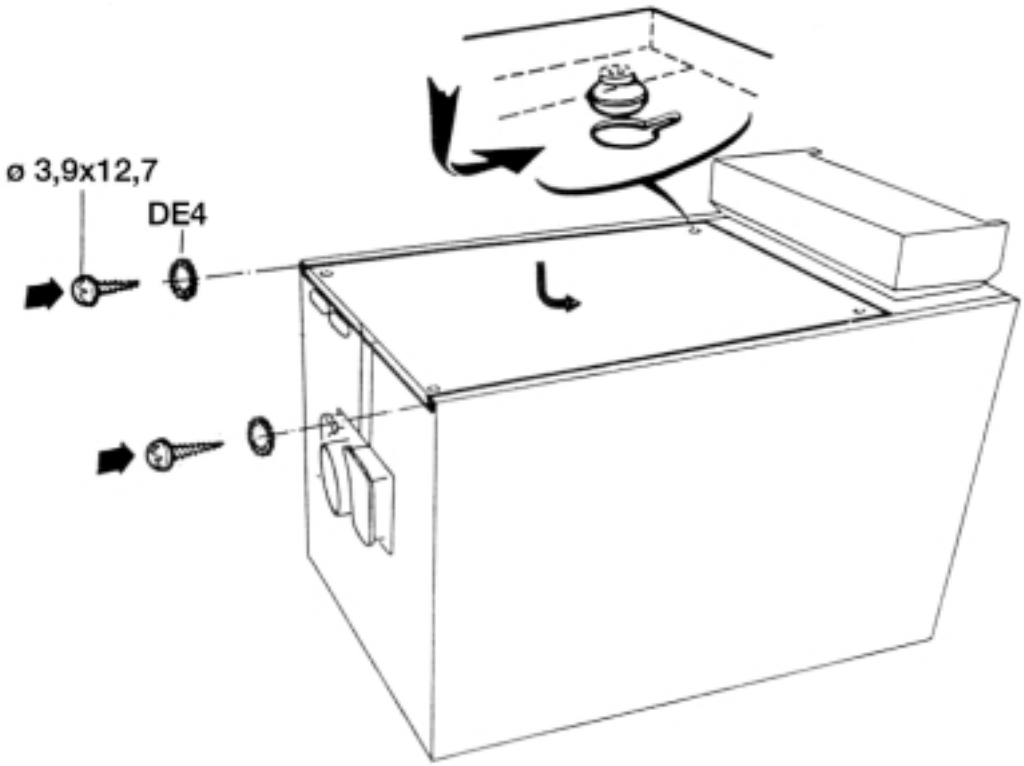

8219-EN-56 A

STANDARD CONTROL PANEL - HARRIER ES

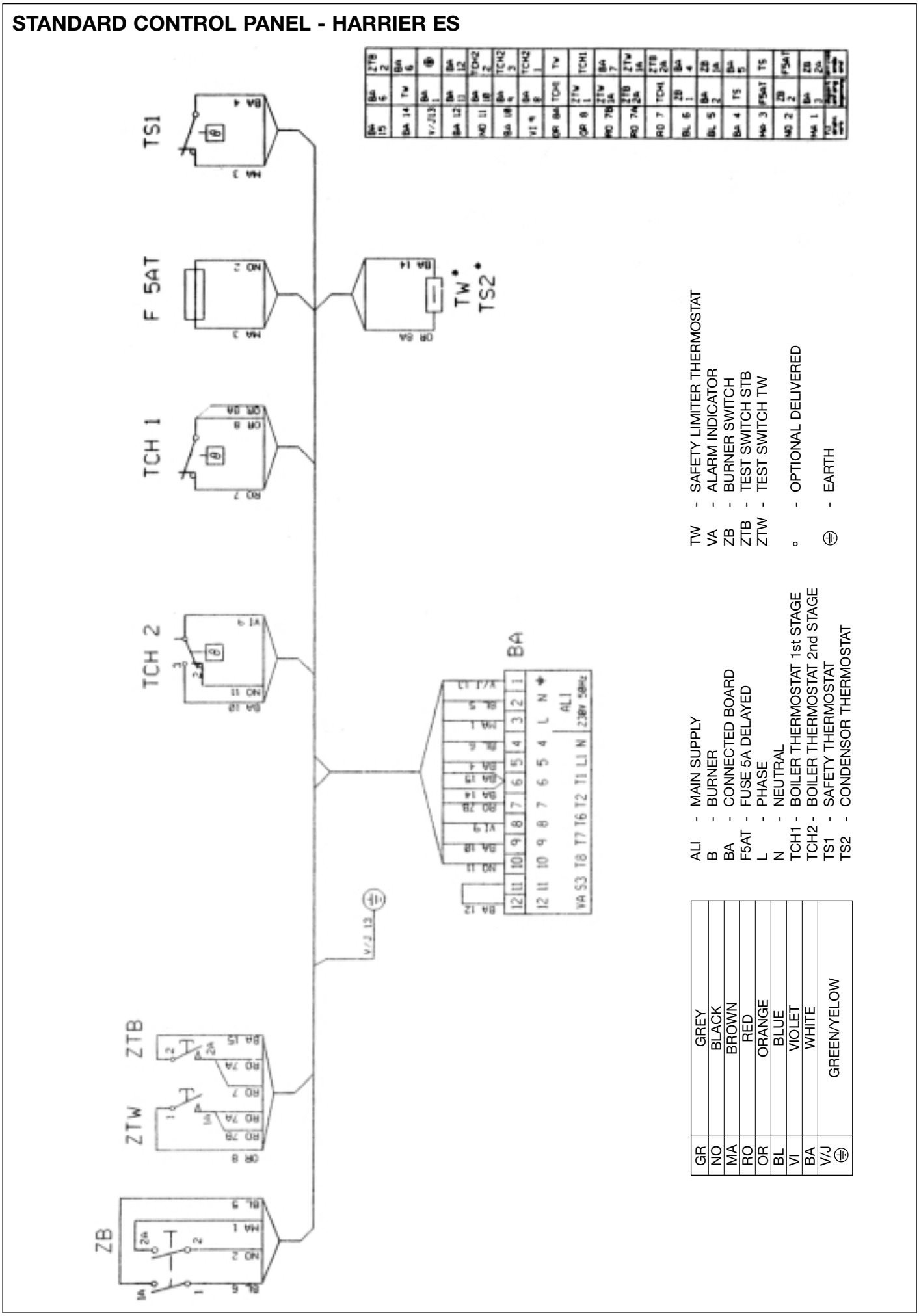

DELUXE CONTROL PANEL - HARRIER ES

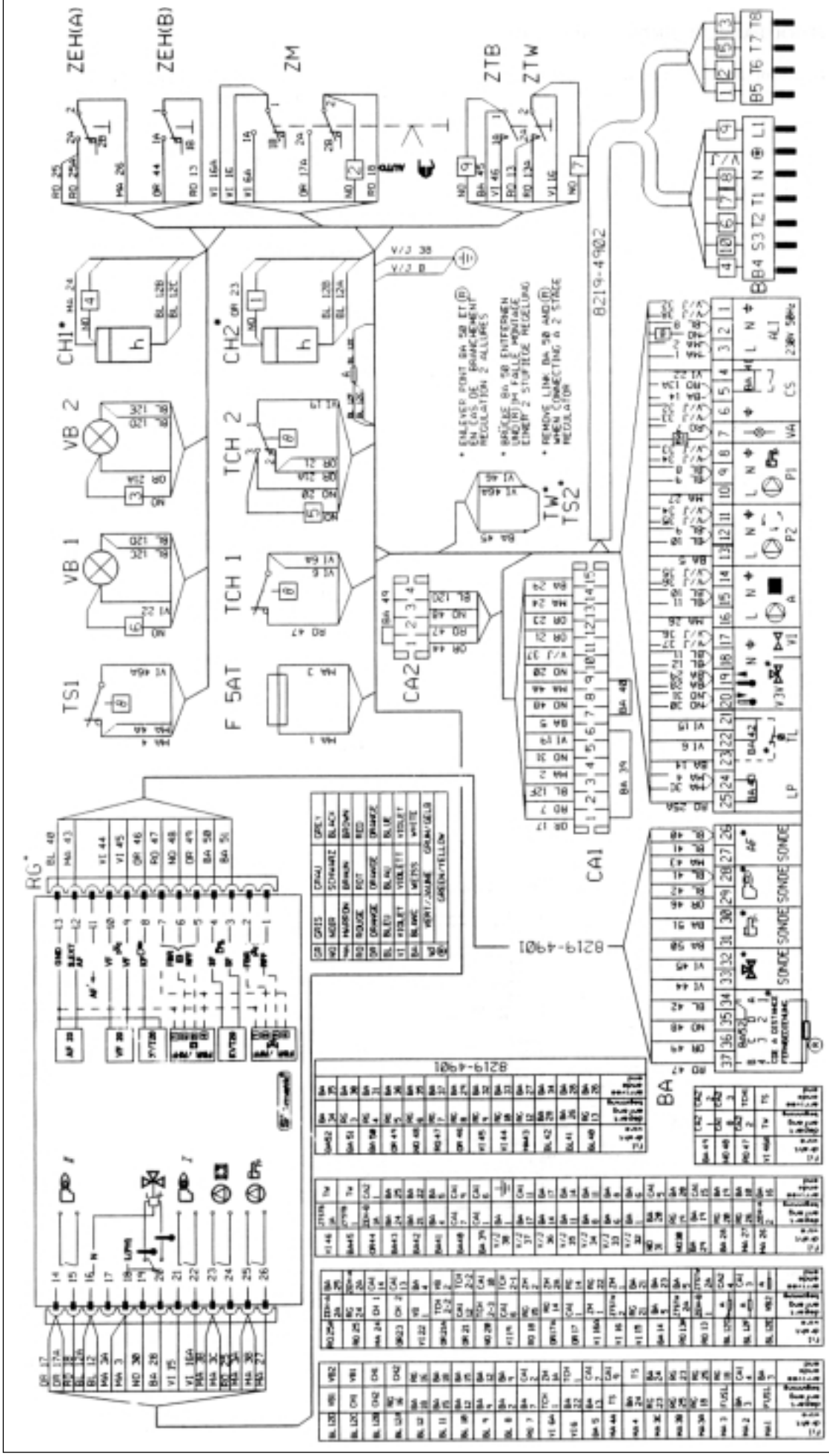

A - HEATING PUMP
ALI - MAIN SUPPLY
BA - CONNECTING BOARD
B - BURNER
CA1 - CASCADE CONNECTION 1
CA2 - CASCADE CONNECTION 2
CH1 - HOUR RUN METER 1st STAGE
CH2 - HOUR RUN METER 2nd STAGE
CS - SAFETY CONTACT

F5AT - FUSE 5A DELAYED
L - PHASE
LP - PUMP LOGIC
N - NEUTRAL
P1 - LOAD PUMP
P2 - SHUNT PUMP
R - RESISTANCE 1430
RG - REGULATOR
TCH1 - BOILER THERMOSTAT 1st STAGE

TCH2 - BOILER THERMOSTAT 2nd STAGE
TL - LIMITER THERMOSTAT
TS1 - SAFETY THERMOSTAT
TS2 - CONDENSOR THERMOSTAT
TW - SAFETY LIMITER THERMOSTAT
VA - ALARM INDICATOR
VB1 - ON/OFF INDICATOR 1st STAGE
VB2 - ON/OFF INDICATOR 2nd STAGE
V3V - THREE WAY VALVE

VI - GATE VALVE
ZEH(A)- SUMMER-WINTER SWITCH HEATING PUMP
ZEH(B)- SUMMER-WINTER SWITCH BURNER
ZM - MANUAL MODE SWITCH
ZTB - TEST SWITCH STB
ZTW - TEST SWITCH TW
⏚ - EARTH
⊕ - OPTIONAL DELIVERED

DELUXE CONTROL PANEL BURNER CONNECTION

• **The Burner control circuit** is fitted with 2 standard European connector-plugs and can be fitted directly to the burners, fitted with connector-sockets. In the case of a burner not fitted with sockets, remove the plugs on the burner cable from the boiler and connect the leads to the terminal bar on the burner, proceeding as follows:

No (9) [1] Control circuit phase interrupted in panel by safety Thermostat TS, Limit Thermostat TS and panel ON/OFF switch ZG. Connect to control circuit live terminal burner.
NOTE: The connection terminal for this control phase must be separate from those of the power supply phase(s) which are wired direct to the burner via the installer supplied burner mains relay.

No (8) [N] Neutral from control panel interrupted by panel ON/OFF switch. Connect to Neutral terminal of burner control box.

No (7) T1 Live feed from burner control circuit downstream of burner ON/OFF switch. Connect to live side of first stage control thermostat (High temperature setting).

No (6) T2 Return from 1st stage control thermostat (High temperature setting). Live on this lead, hence on T2 allows burner to fire on low fire in a 2 stage burner.

No (10)S3 Burner lock indicator. Feeds signal from lockout terminal on burner control box to lock out indicator on boiler control panel.

No (4) B4 Feed to 1st stage operating indicator from burner low fire control. Indicates low fire in operation. Essentially feed back from live on No (6) T2.

No (2) T6 Live feed from burner control circuit downstream of burner ON/OFF switch. Connects to live side of 2nd stage control thermostat (Low setting thermostat).

No (3) T8 Return from 2nd stage control thermostat (low temperature setting). Live on this lead, hence on T8 allows burner to fire on high fire in a 2 stage burner.

No (5) T7 Back contact from 2nd stage control thermostat (low temperature setting). Live on this lead, hence T7 indicates high fire out of operation (used for modulating burners only).

No (1) B5 Feed to 2nd stage operating indicator from burner high fire control to boiler panel. Indicates high fire in operation. Essentially feed back from live on No (3) T8.

g/y Earth.

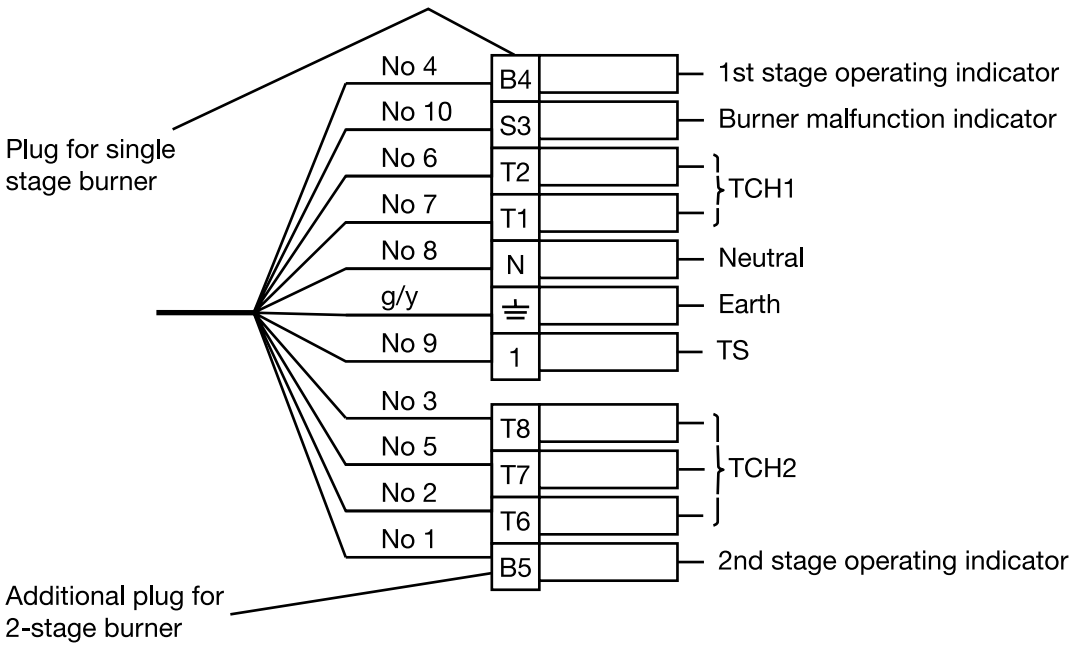

NOTES

NOTES

Technical Training

The Caradon Plumbing Limited Technical Training Centre offers a series of first class training courses for domestic, commercial and industrial heating installers, engineers and system specifiers. For details of courses please ring:

.....01482 498432

Caradon Plumbing Limited pursues a policy of continuing improvement in the design and performance of its products. The right is therefore reserved to vary specification without notice.

September 2001 AO

PO Box 103
National Avenue
Kingston upon Hull
HU5 4JN
Telephone 01482 492251
Facsimile 01482 448858

Registration No. 4049093
Registered Office
Kelburn House
7-19 Mosley Street
Newcastle Upon Tyne
NE1 1YE

Commercial Heating Technical Helpline 01482 498376

Caradon
Plumbing Limited